故障码 P-Code	P0480
硬件结构	Hardware structure

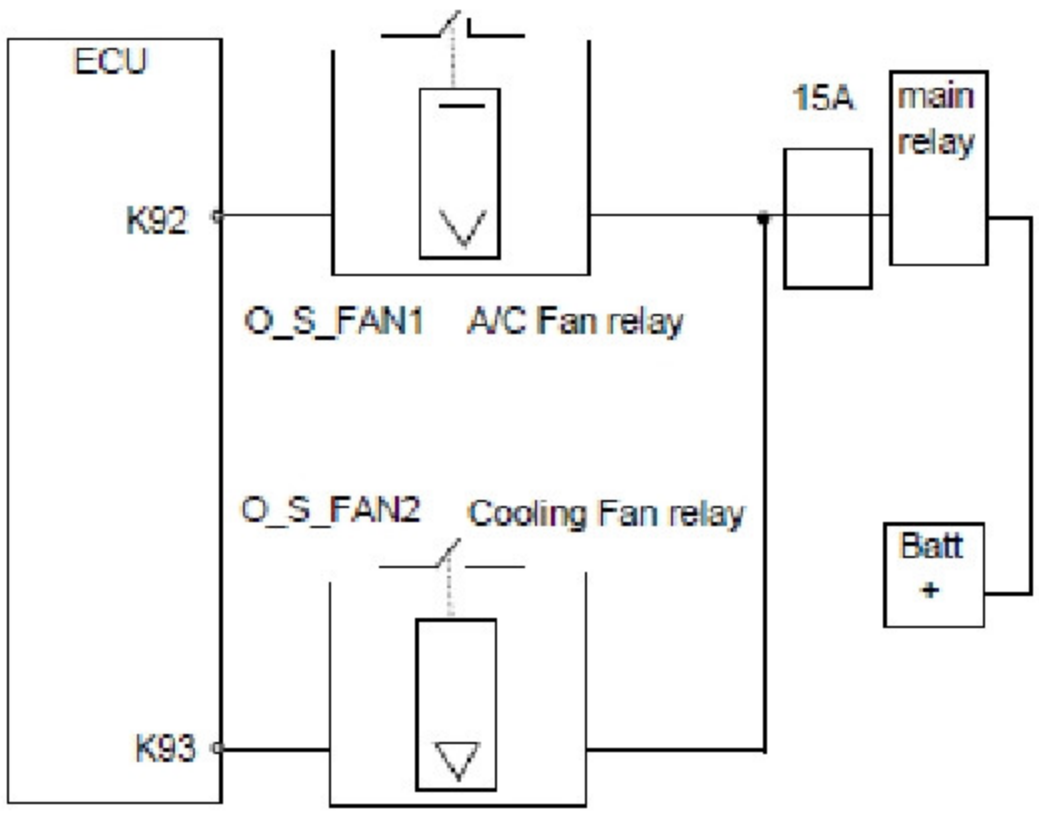

故障类型描述	Fault Path Type Description
开关型低速风扇控制开路	No load error of Fan1
故障发生的可能原因	Possible Cause
风扇电路 1 开路	Fan circuit 1 open circuit
检查项目	Check Items
检测风扇控制电路	Check the fan control circuit
可能的影响	Possible Symptom
风扇工作会不正常,其具体现象则取决于风扇电路结构	Fan in abnormal operations depending on the fan circuit structure

故障码 P-Code	P0481
硬件结构	Hardware structure

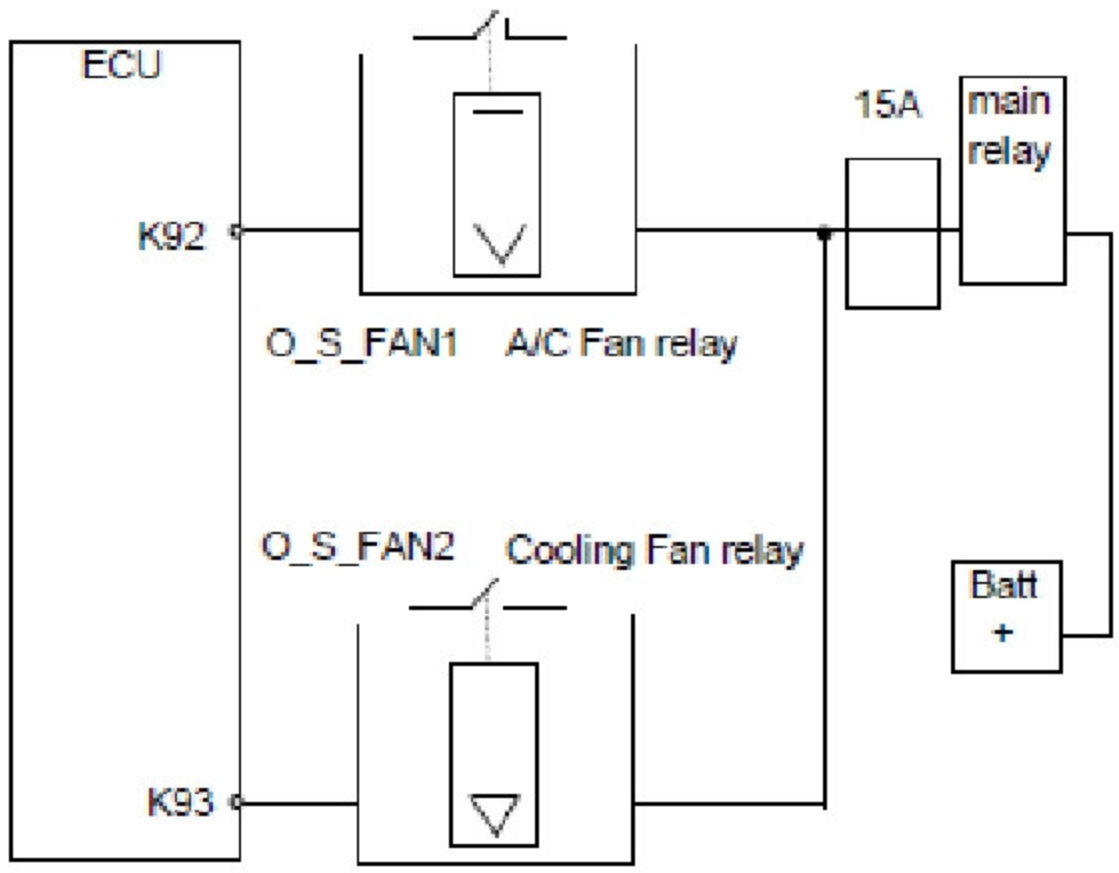

故障类型描述	Fault Path Type Description
开关型高速风扇控制开路	No load error of Fan2
故障发生的可能原因	Possible Cause
风扇电路 2 开路	Fan circuit 2 open circuit
检查项目	Check Items
检测风扇控制电路	Check the fan control circuit
可能的影响	Possible Symptom
风扇工作会不正常,其具体现象则取决于风扇电路结构	Fan in abnormal operations depending on the fan circuit structure

故障码 P-Code	P0483
硬件结构	Hardware structure

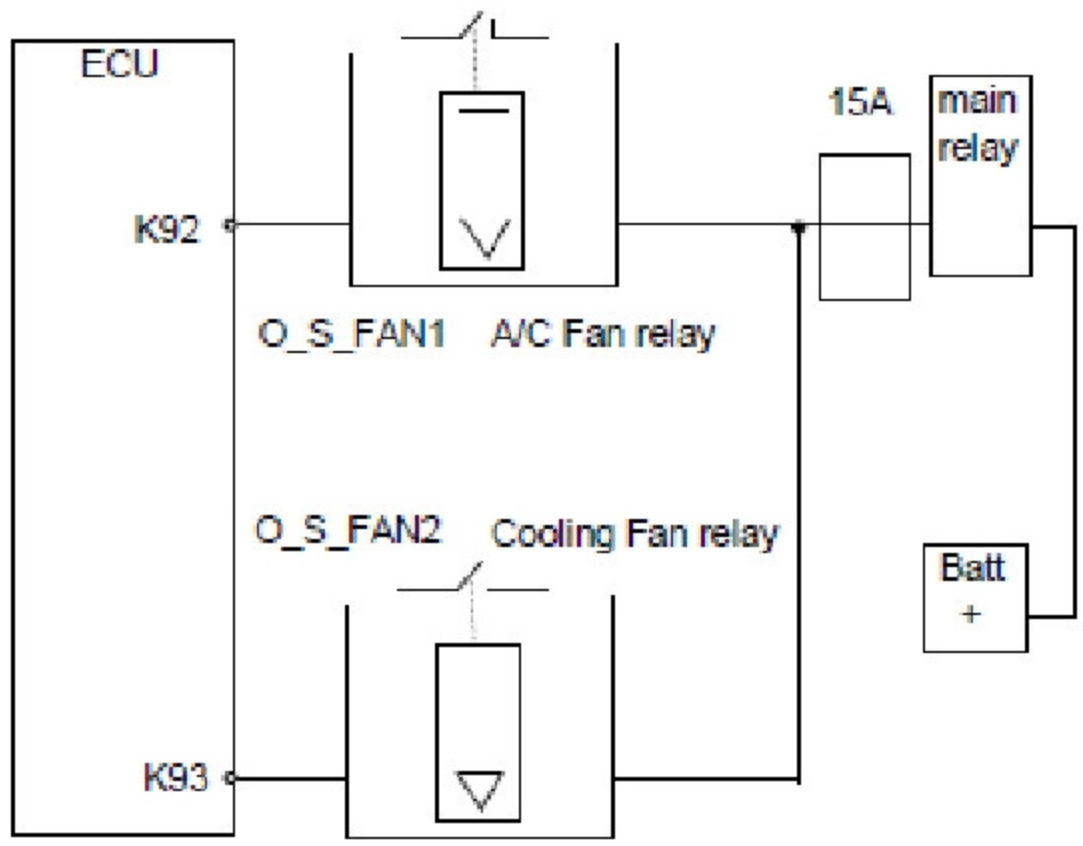

故障类型描述	Fault Path Type Description
开关型低速风扇控制过热	Over temperature error of Fan1
故障发生的可能原因	Possible Cause
风扇电路 1 过热	Fan circuit 1 over temperature
检查项目	Check Items
检测风扇控制电路	Check the fan control circuit
可能的影响	Possible Symptom
风扇工作会不正常,其具体现象则取决于风扇电路结构	Fan in abnormal operations depending on the fan circuit structure

故障码 P-Code	P0484
硬件结构	Hardware structure

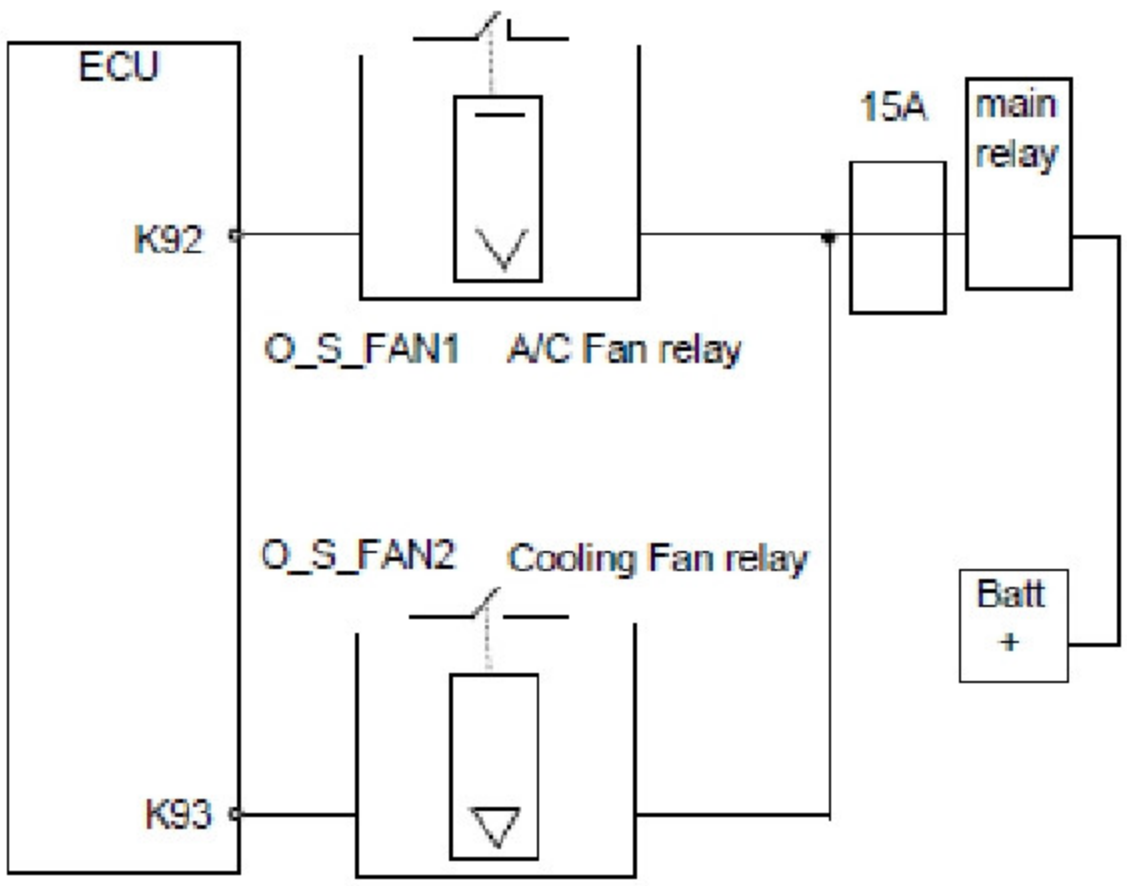

故障类型描述	Fault Path Type Description
开关型高速风扇控制过热	Over temperature error of Fan2
故障发生的可能原因	Possible Cause
风扇电路 2 过热	Fan circuit 2 over temperature
检查项目	Check Items
检测风扇控制电路	Check the fan control circuit
可能的影响	Possible Symptom
风扇工作会不正常,其具体现象则取决于风扇电路结构	Fan in abnormal operations depending on the fan circuit structure

故障码 P-Code	P0691
硬件结构	Hardware structure

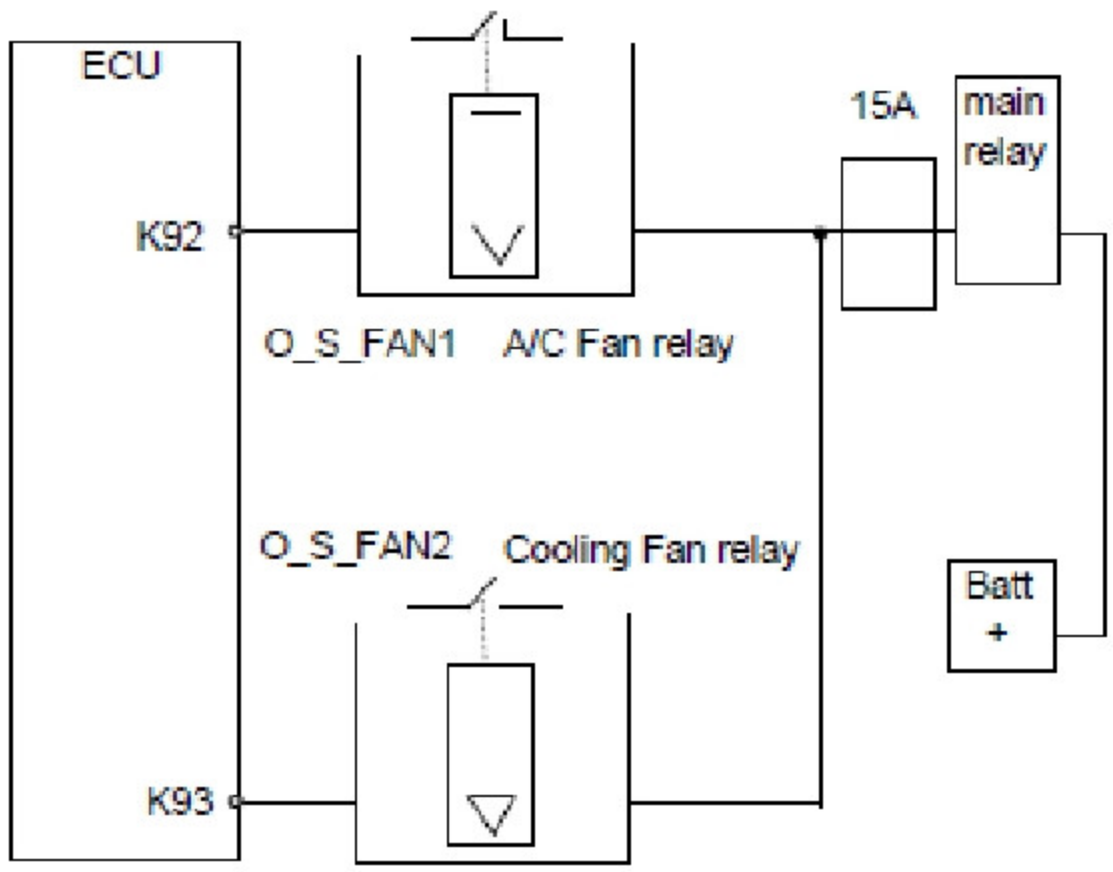

故障类型描述	Fault Path Type Description
开关型低速风扇控制对电源短路	Short circuit to battery error of Fan1
故障发生的可能原因	Possible Cause
风扇电路 1 对电源 , 高电平短路	Fan circuit 1 short circuit to battery, high level
检查项目	Check Items
检测风扇控制电路	Check the fan control circuit
可能的影响	Possible Symptom
风扇工作会不正常,其具体现象则取决于风扇电路结构	Fan in abnormal operations depending on the fan circuit structure

故障码 P-Code	P0693
硬件结构	Hardware structure

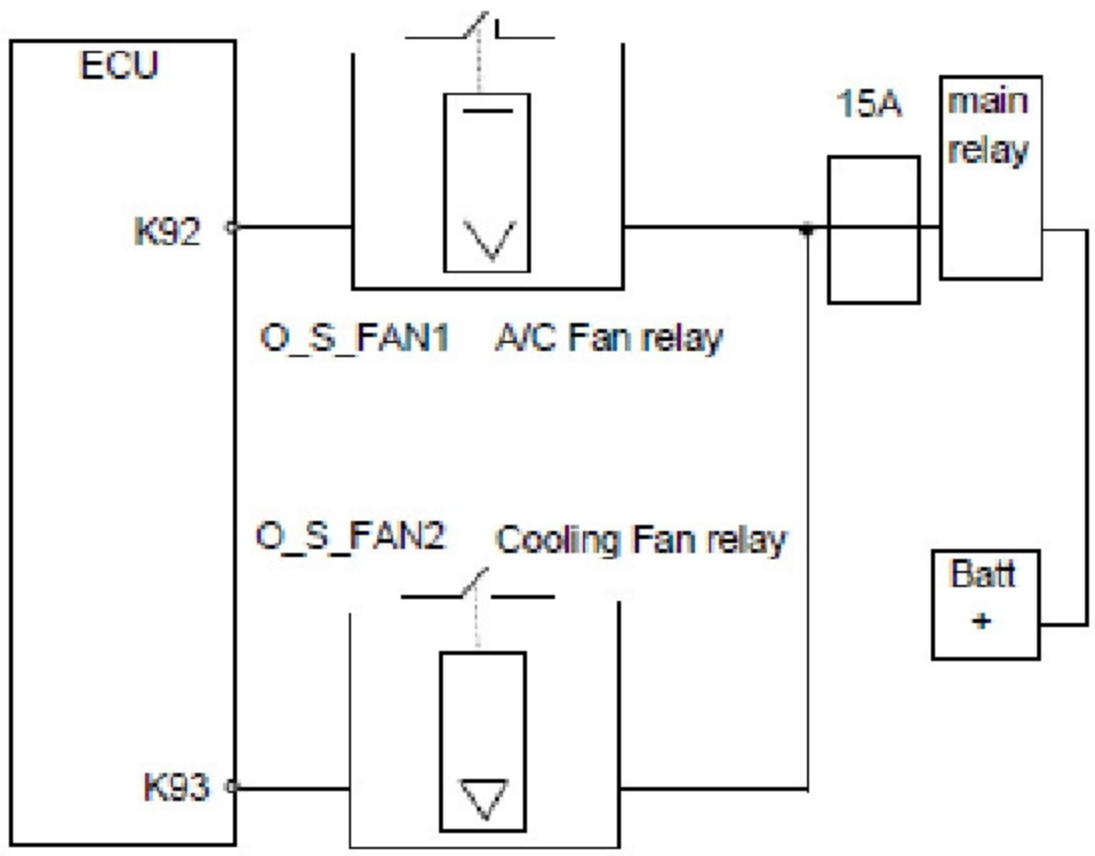

故障类型描述	Fault Path Type Description
开关型高速风扇控制对电源短路	Short circuit to battery error of Fan2
故障发生的可能原因	Possible Cause
风扇电路 2 对电源 , 高电平短路	Fan circuit 2 short circuit to battery, high level
检查项目	Check Items
检测风扇控制电路	Check the fan control circuit
可能的影响	Possible Symptom
风扇工作会不正常,其具体现象则取决于风扇电路结构	Fan in abnormal operations depending on the fan circuit structure

故障码 P-Code	P0692
硬件结构	Hardware structure

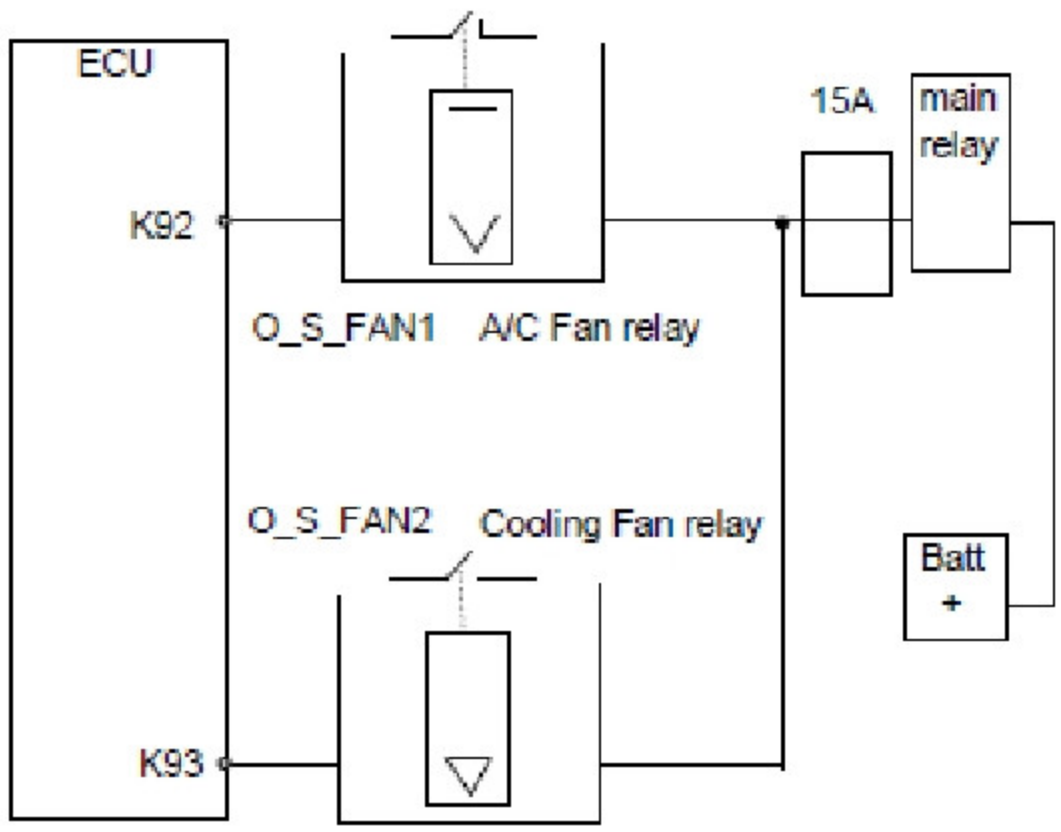

故障类型描述	Fault Path Type Description
开关型低速风扇控制对地短路	Short circuit to ground error of Fan1
故障发生的可能原因	Possible Cause
风扇电路 1 对地 , 低电平短路	Fan circuit 1 short circuit to ground, low level
检查项目	Check Items
检测风扇控制电路	Check the fan control circuit
可能的影响	Possible Symptom
风扇工作会不正常,其具体现象则取决于风扇电路结构	Fan in abnormal operations depending on the fan circuit structure

故障码 P-Code	P0694
硬件结构	Hardware structure

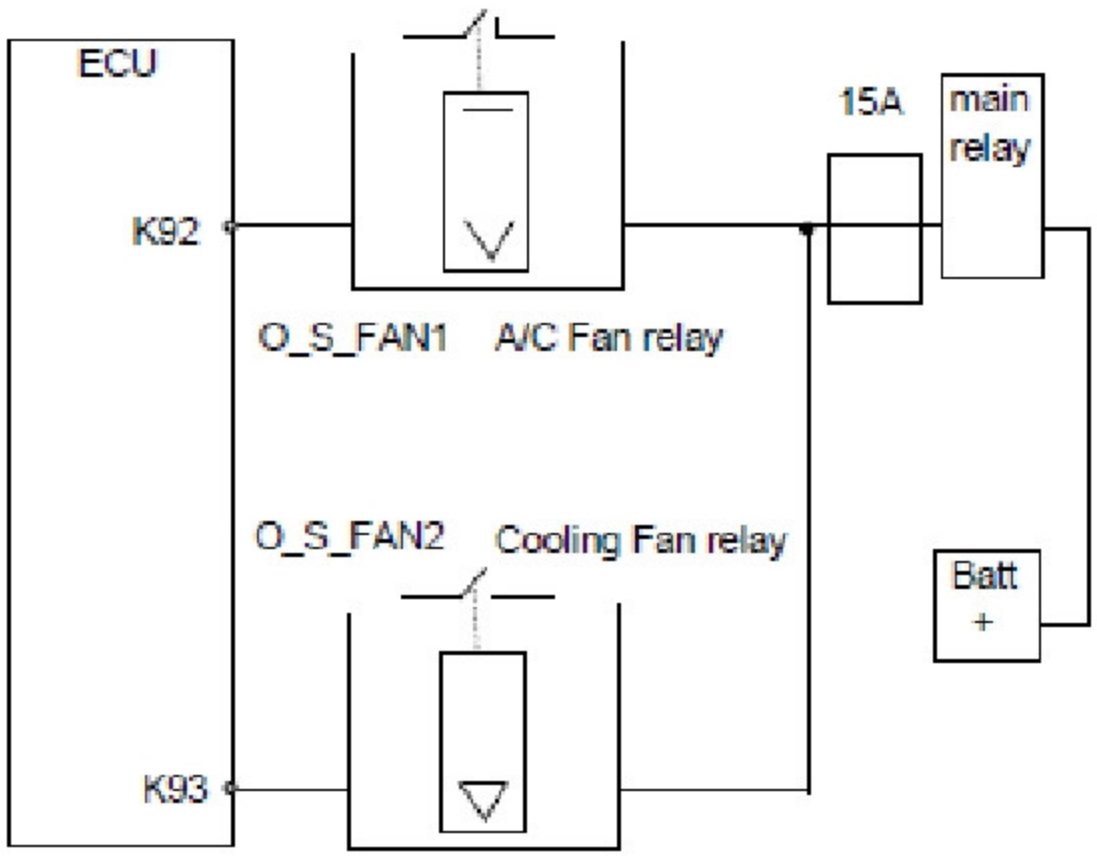

故障类型描述	Fault Path Type Description
开关型高速风扇控制对地短路	Short circuit to ground error of Fan2
故障发生的可能原因	Possible Cause
风扇电路 2 对地 , 低电平短路	Fan circuit 2 short circuit to ground, low level
检查项目	Check Items
检测风扇控制电路	Check the fan control circuit
可能的影响	Possible Symptom
风扇工作会不正常,其具体现象则取决于风扇电路结构	Fan in abnormal operations depending on the fan circuit structure

故障码 P-Code	P1020
硬件结构	Hardware structure

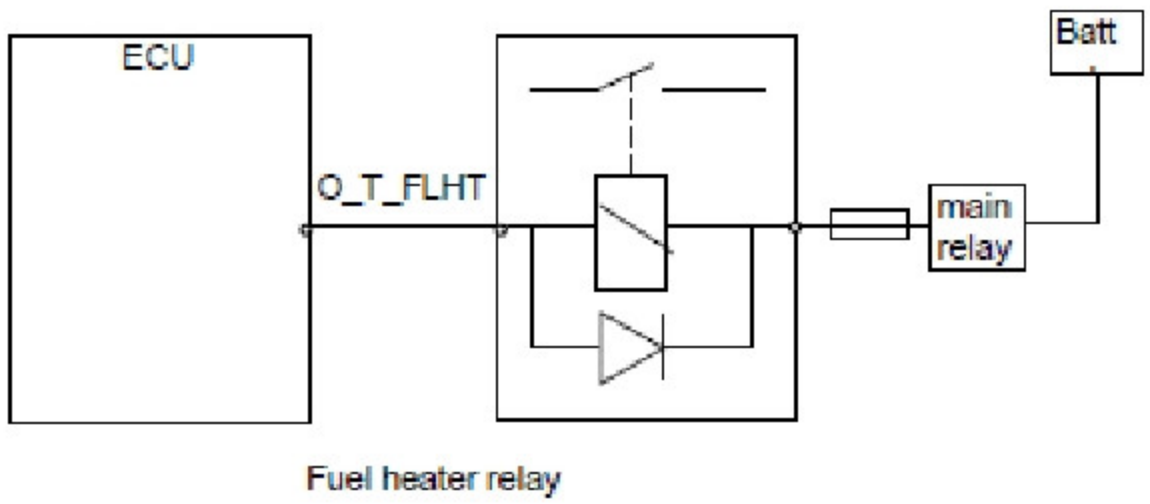

故障类型描述	Fault Path Type Description
燃油滤清器加热驱动级开路	No load error in powerstage of fuel filter heating
故障发生的可能原因	Possible Cause
燃油滤清加热器的继电器控制电路开路(69号线开路)	Relay control circuit of fuel filter heater open circuit (69 open circuit)
检查项目	Check Items
检查油滤加热器控制端电路是否开路 (69)	Check if the control end of oil filter heater open circuit (69)
可能的影响	Possible Symptom
油滤加热器不工作	Oil filter heater not working

故障码 P-Code	P1025
硬件结构	Hardware structure

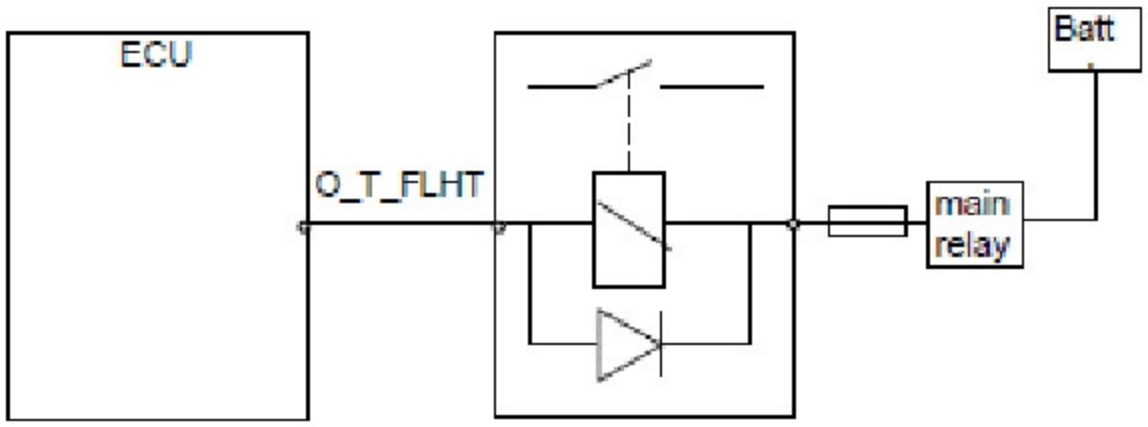

Fuel heater relay

故障类型描述	Fault Path Type Description
燃油滤清器加热驱动级温度过高	Over Temperature error in powerstage of fuel filter heating
故障发生的可能原因	Possible Cause
燃油滤清加热器的驱动电路过热 (ECU 模块)	Driving circuit of oil filter heater over temperature (ECU module)
检查项目	Check Items
检查油滤加热器 ,ECU 模块的工作情况	Check the working conditions of oil filter heater and ECU module
可能的影响	Possible Symptom
油滤加热器可能不正常工作	Oil filter heater may be in abnormal operation

故障码 P-Code	P1021
硬件结构	Hardware structure

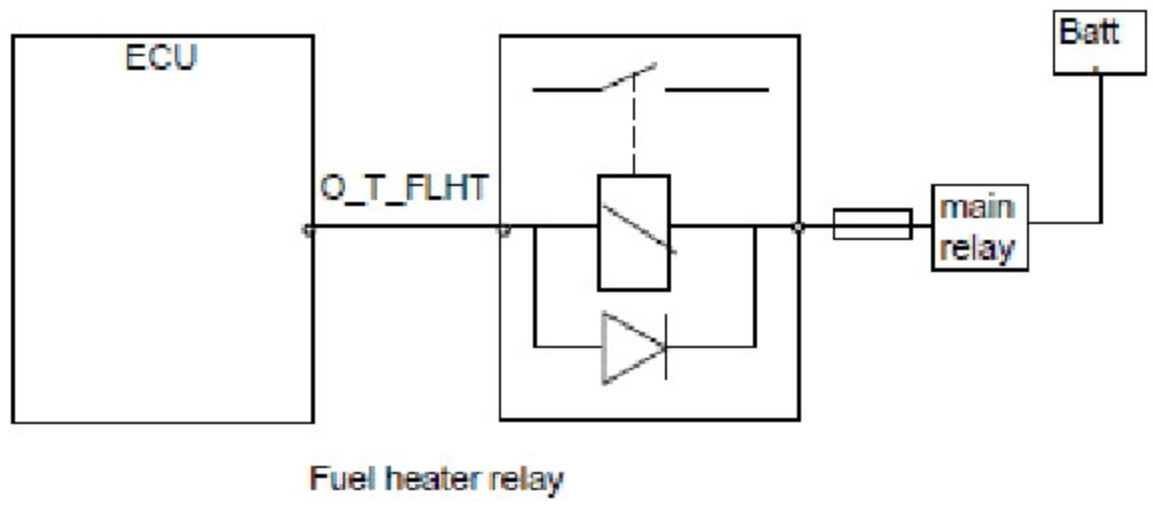

故障类型描述	Fault Path Type Description
燃油滤清器加热驱动级对电源短路	Short circuit to battery error in powerstage of fuel filter heating
故障发生的可能原因	Possible Cause
燃油滤清加热器的继电器控制电路对电源,高电平短路 (69 对电源短路)	Relay control of oil filter heater short circuit to battery, high level (69 short circuit to battery)
检查项目	Check Items
检查油滤加热器控制端电路是否对电源,高电平短路 (69)	Check if the control end of oil filter heater short circuit to battery, high level (69)
可能的影响	Possible Symptom
油滤加热器不工作	Oil filter heater not working

故障码 P-Code	P1022
硬件结构	Hardware structure

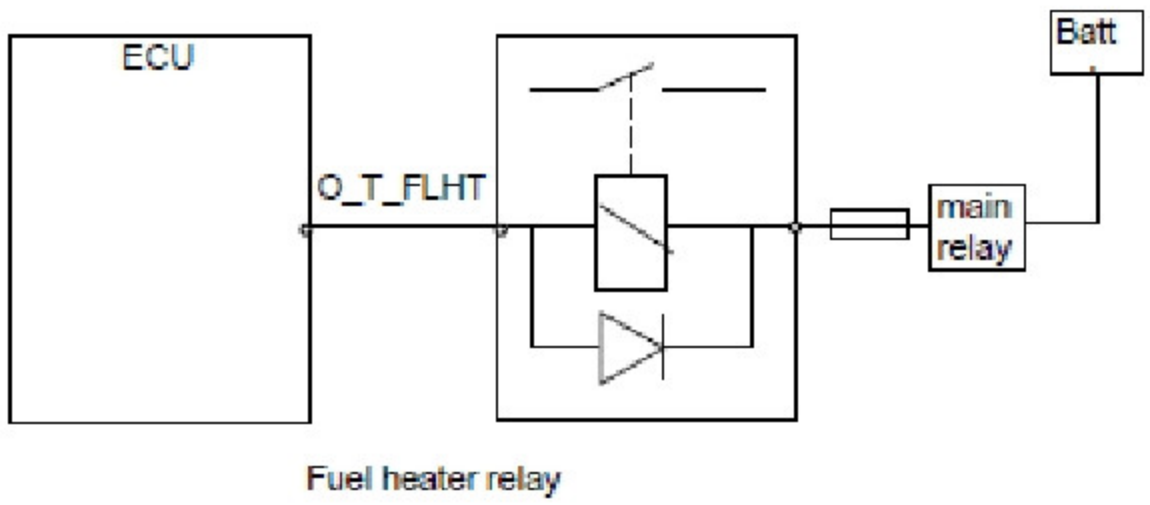

故障类型描述	Fault Path Type Description
燃油滤清器加热驱动级对地短路	Short circuit to ground error in powerstage of fuel filter heating
故障发生的可能原因	Possible Cause
燃油滤清加热器的继电器控制电路对地,低电平短路 (69 对地短路)	Relay control of oil filter heater short circuit to ground, low level (69 short circuit to ground)
检查项目	Check Items
检查油滤加热器控制端电路是否对地,低电平短路 (69)	Check if the control end of oil filter heater short circuit to ground, low level (69)
可能的影响	Possible Symptom
油滤加热器始终工作,可能会导致加热模块烧毁或电池电压过低等	Continuous operation of oil filter heater may cause the heating module to be burnt or low battery voltage etc

故障码 P-Code	P2264
硬件结构	Hardware structure

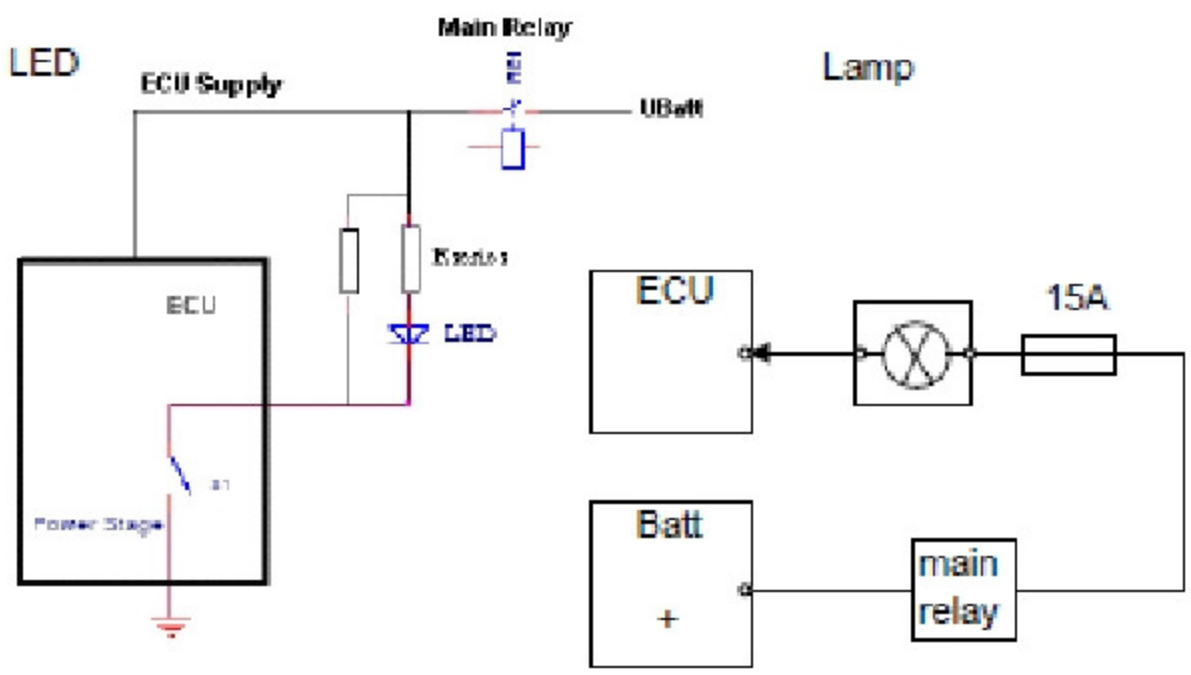

故障类型描述	Fault Path Type Description
油水分离指示灯驱动电路开路	No load error for fuel sensor
故障发生的可能原因	Possible Cause
ECU 到灯的线路出现开路	Open circuit from the ECU to the lamp
检查项目	Check Items
检测 ECU 到灯之间的线路故障	Check the error from ECU and the lamp
可能的影响	Possible Symptom
灯常灭	Lamp always off

故障码 P-Code	P2268
硬件结构	Hardware structure

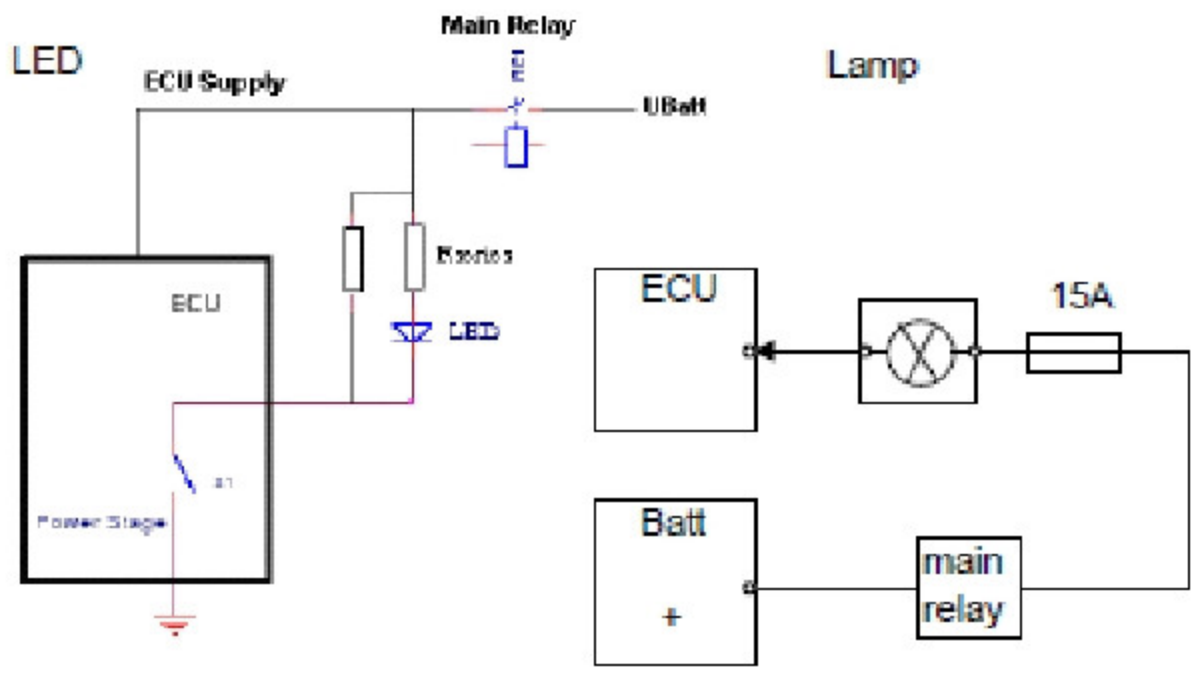

故障类型描述	Fault Path Type Description
油水分离指示灯驱动电路过热	Temperature error of Water in Fuel Lamp
故障发生的可能原因	Possible Cause
-	-
检查项目	Check Items
检测 ECU 到灯之间的线路故障	Check the error from ECU and the lamp
可能的影响	Possible Symptom
灯不正常工作	Abnormal lamp operation

故障码 P-Code	P2267
硬件结构	Hardware structure

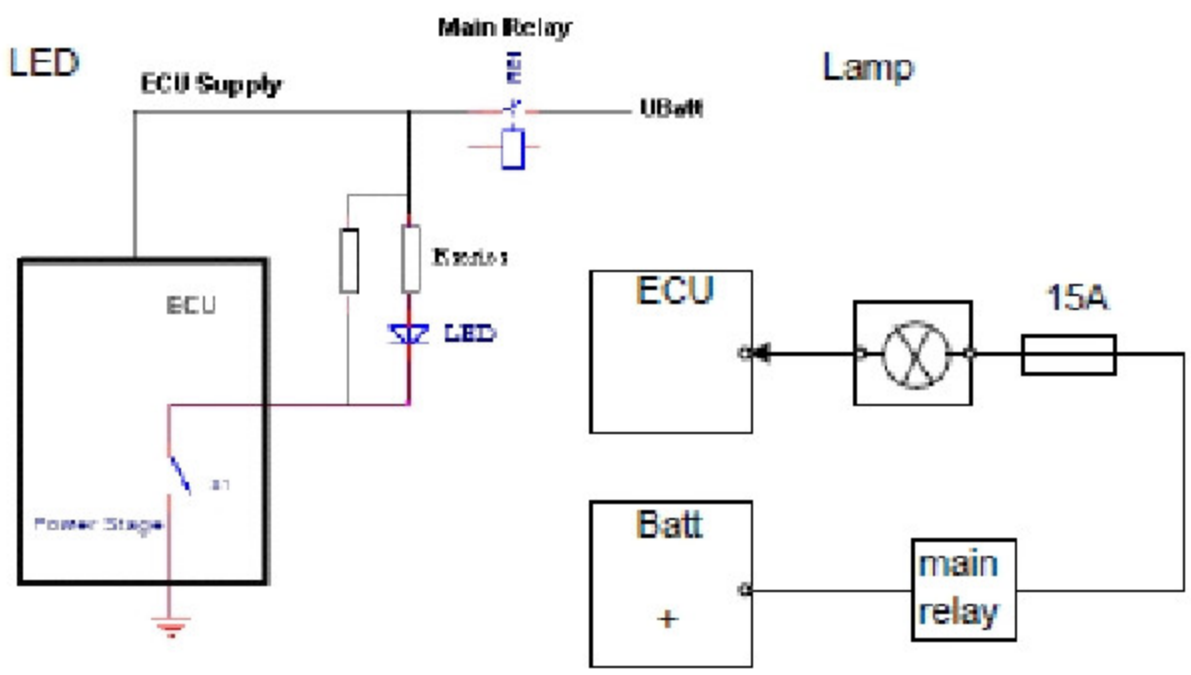

故障类型描述	Fault Path Type Description
油水分离指示灯驱动电路对电源短路	Short circuit to battery error of Water in Fuel Lamp
故障发生的可能原因	Possible Cause
ECU 到灯的线路出现短路	Short circuit from the ECU to the lamp
检查项目	Check Items
检测 ECU 到灯之间的线路故障	Check the error from ECU and the lamp
可能的影响	Possible Symptom
灯常灭	Lamp always off

故障码 P-Code	P2266
硬件结构	Hardware structure

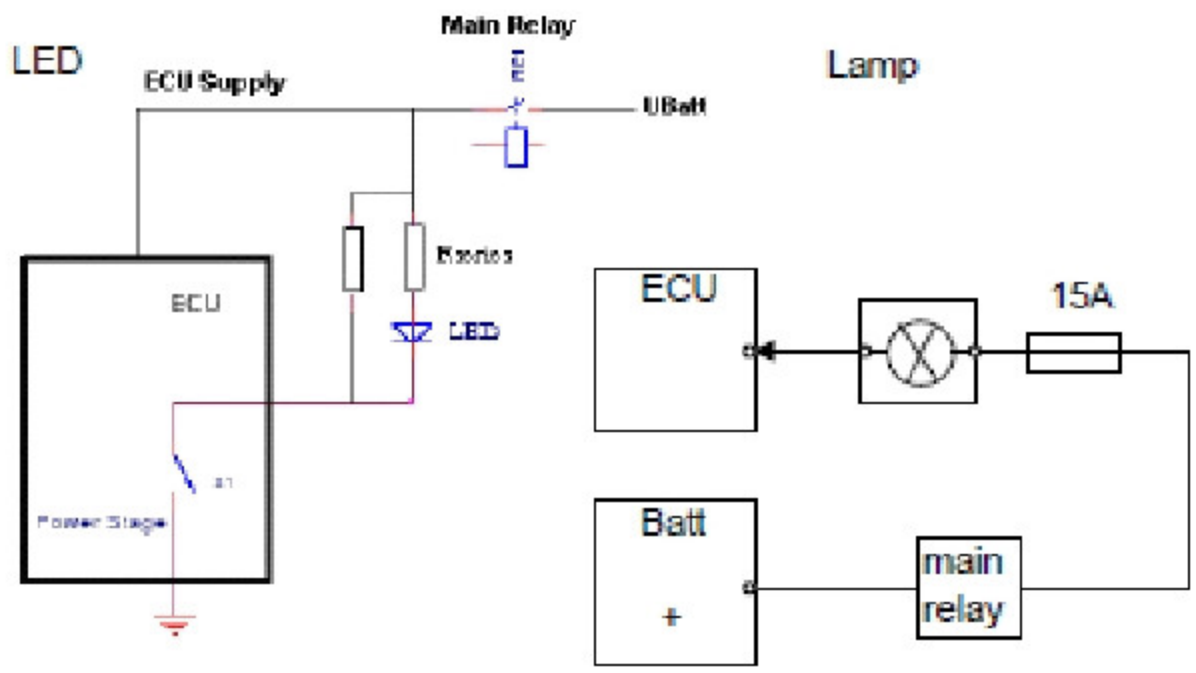

故障类型描述	Fault Path Type Description
油水分离指示灯驱动电路对地短路	Short circuit to ground error of Water in Fuel Lamp
故障发生的可能原因	Possible Cause
ECU 到灯的线路出现短路	Short circuit from the ECU to the lamp
检查项目	Check Items
检测 ECU 到灯之间的线路故障	Check the error from ECU and the lamp
可能的影响	Possible Symptom
灯常亮	Lamp always on

故障码 P-Code	P2269
硬件结构	Hardware structure

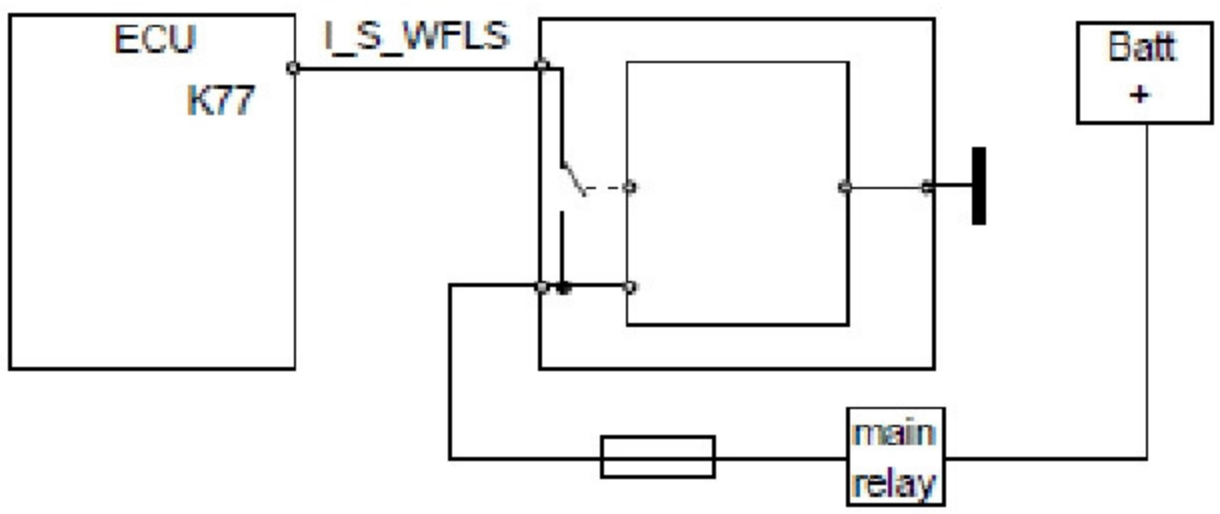

故障类型描述	Fault Path Type Description
油水分离传感器自检故障 （传感器损坏）	Max threshold error for the Water in Fuel sensor self test
故障发生的可能原因	Possible Cause
油中有水传感器已坏 , 如对电源短路 (该错误只在上电后自检过程中报出)	Damaged water-in-the-oil sensor, such as short circuit to battery (the error message displayed after powered on and during the self check)
检查项目	Check Items
检查油中有水传感器电路,本身的工作特性或更换油中有水传感器	Check the circuits of the water-in-the-oil sensor, and its characteristics or replace the sensor
可能的影响	Possible Symptom
油含水指示灯显示会不正常	Water-in-the-oil indicator in abnormal operation

故障码 P-Code	P2265
硬件结构	Hardware structure

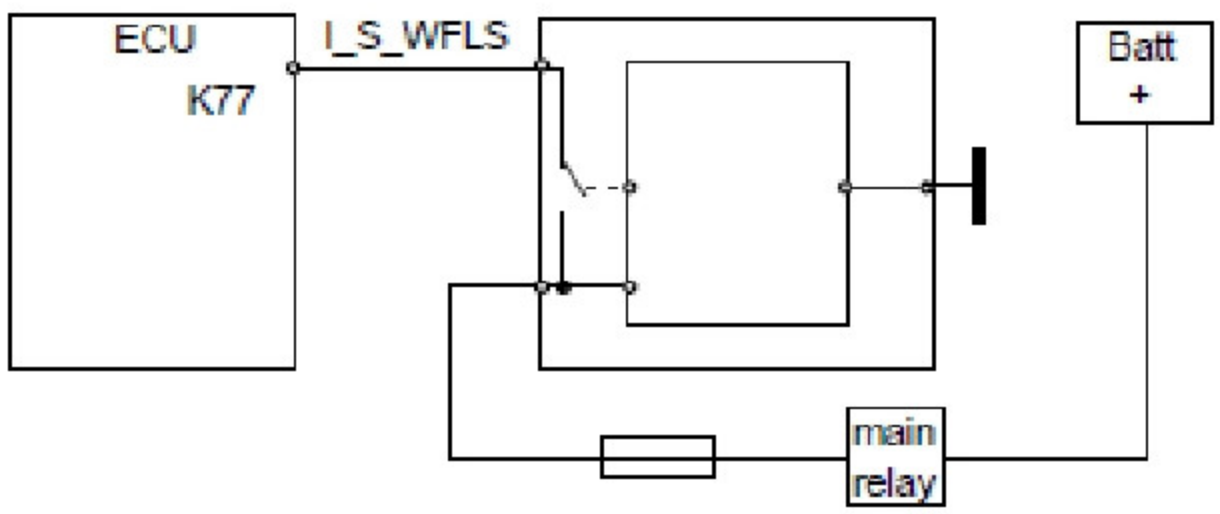

故障类型描述	Fault Path Type Description
油水分离检测水位过高问题	error to report detection of water in fuel
故障发生的可能原因	Possible Cause
油中有水传感器信号线与电源短，油中含水量高，传感器工作不正常等	Signal wire of water-in-the-oil sensor short circuit to battery, high water content in the oil, sensor in abnormal operation etc
检查项目	Check Items
检查油中有水传感器电路,本身的工作特性或更换油中有水传感器，检查油中含水量是否太高	Check the circuits of water-in-the-oil sensor and its characteristics, or replace the water-in-the-oil sensor, and check if the water content in the oil is too high
可能的影响	Possible Symptom
发动机扭矩受限，油中有水指示灯亮	Limited engine torque, water-in-the-oil indicator on

故障码 P-Code	P160A
硬件结构	Hardware structure

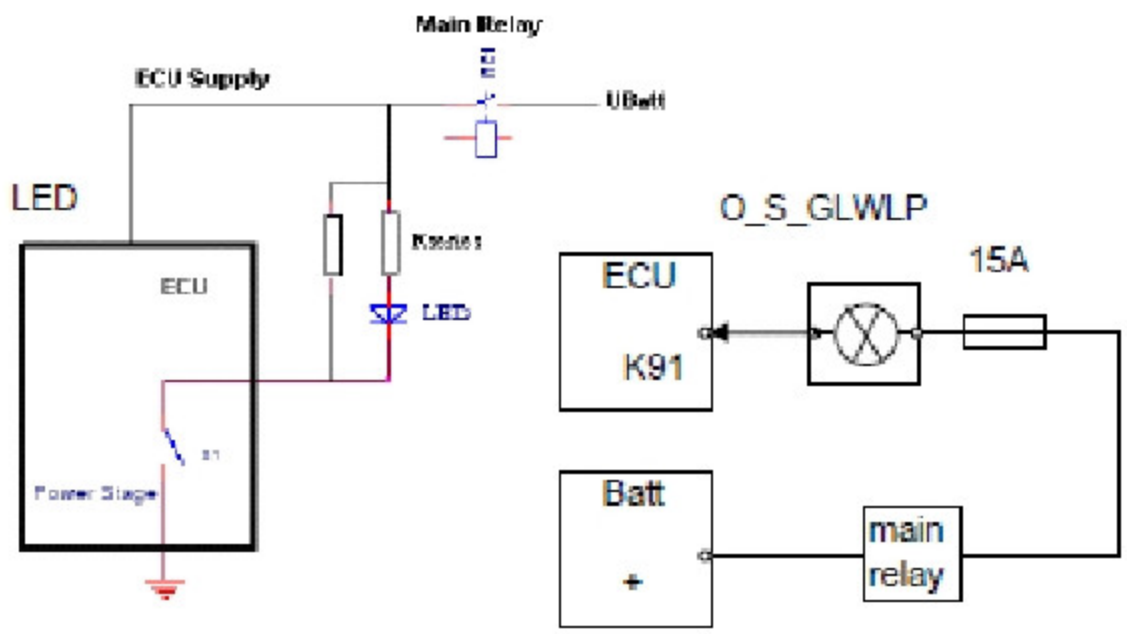

故障类型描述	Fault Path Type Description
预热指示灯开路	No load error of Glow Lamp
故障发生的可能原因	Possible Cause
ECU 到灯的线路出现开路	Open circuit from the ECU to the lamp
检查项目	Check Items
检测 ECU 到灯之间的线路故障	Check the error from ECU and the lamp
可能的影响	Possible Symptom
灯常灭	Lamp always off

故障码 P-Code	P160B
硬件结构	Hardware structure

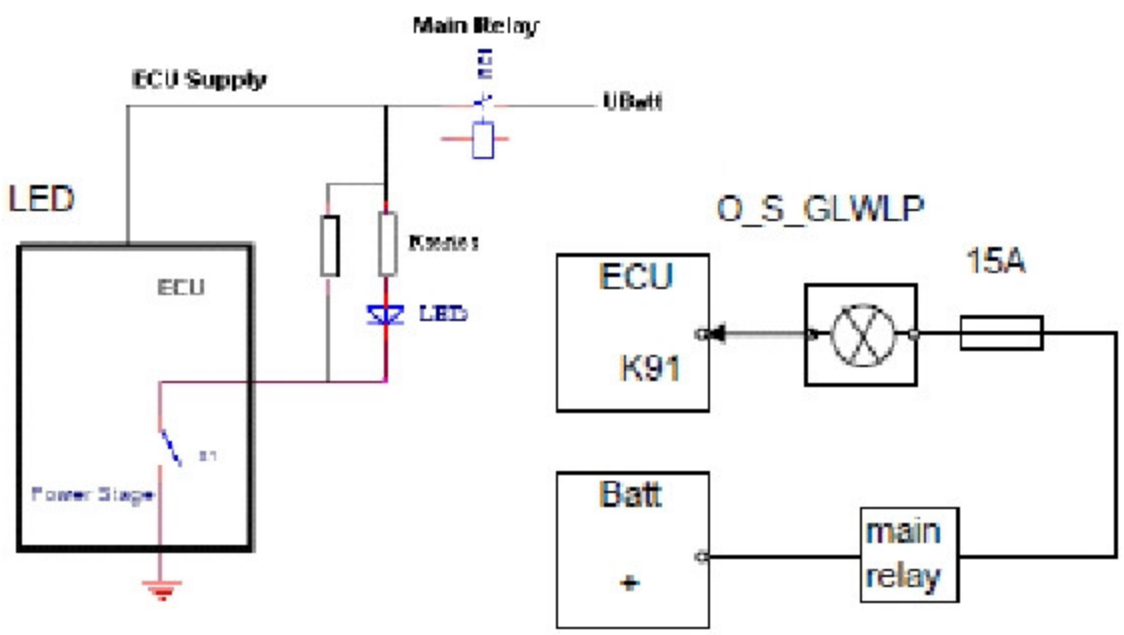

故障类型描述	Fault Path Type Description
预热指示灯驱动电路过热	Over temperature error of Glow Lamp
故障发生的可能原因	Possible Cause
Lamp	Lamp
检查项目	Check Items
检测 ECU 到灯之间的线路故障	Check the error from ECU and the lamp
可能的影响	Possible Symptom
灯不正常工作	Abnormal lamp operation

故障码 P-Code	P1608
硬件结构	Hardware structure

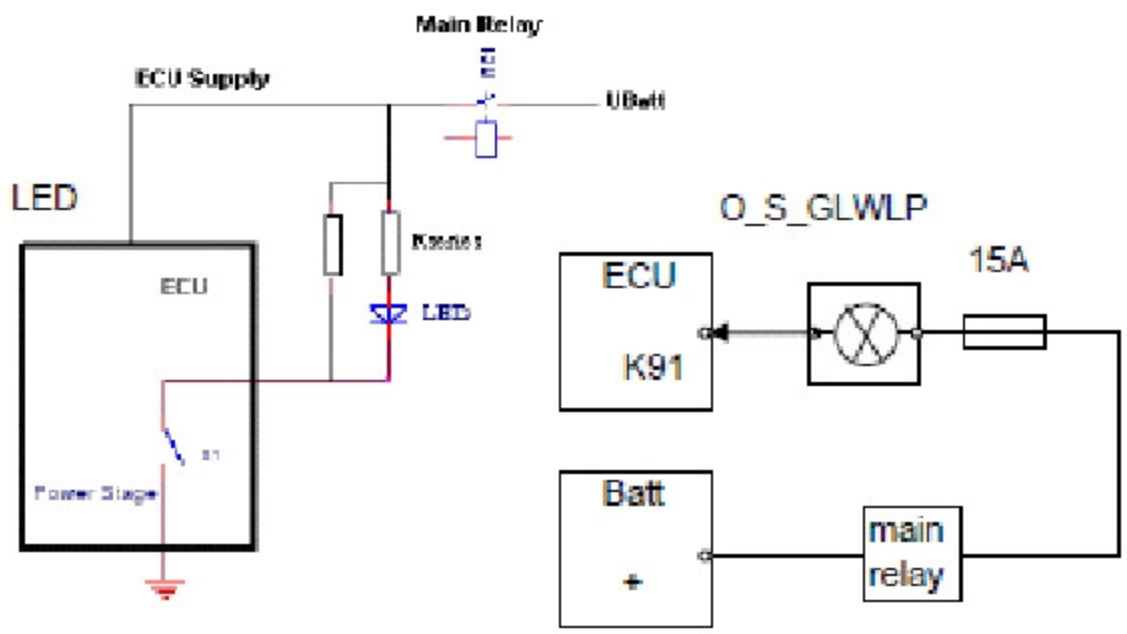

故障类型描述	Fault Path Type Description
预热指示灯对电源短路	Short circuit to battery error of Glow Lamp
故障发生的可能原因	Possible Cause
ECU 到灯的线路出现短路	Short circuit from the ECU to the lamp
检查项目	Check Items
检测 ECU 到灯之间的线路故障	Check the error from ECU and the lamp
可能的影响	Possible Symptom
灯常灭	Lamp always off

故障码 P-Code	P1609
硬件结构	Hardware structure

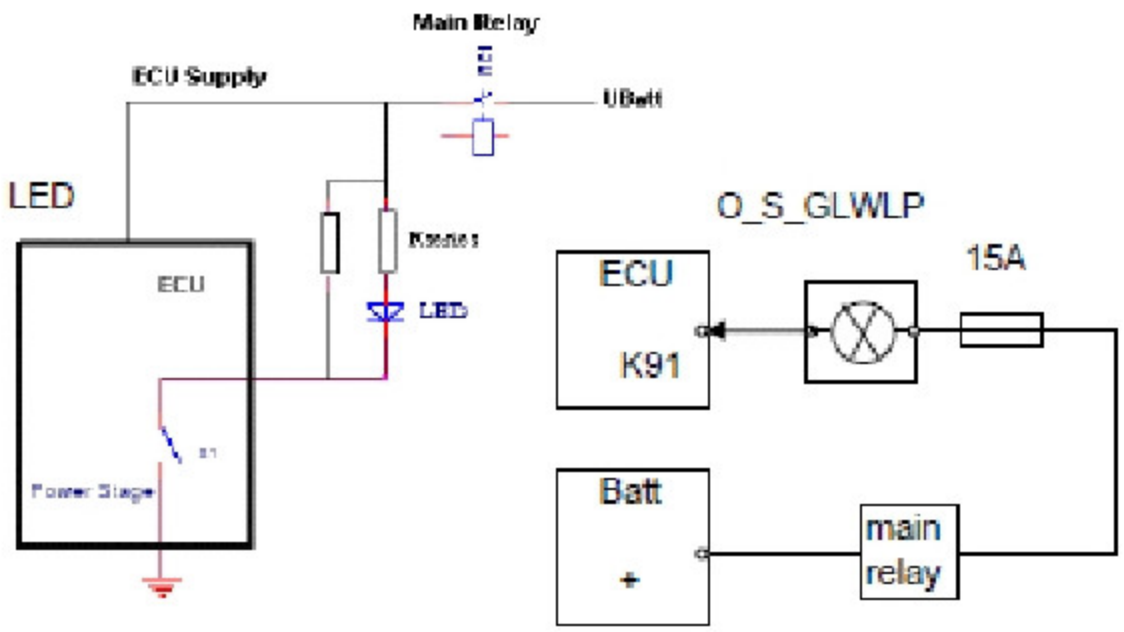

故障类型描述	Fault Path Type Description
预热指示灯对地短路	Short circuit to ground error of Glow Lamp
故障发生的可能原因	Possible Cause
ECU 到灯的线路出现短路	Short circuit from the ECU to the lamp
检查项目	Check Items
检测 ECU 到灯之间的线路故障	Check the error from ECU and the lamp
可能的影响	Possible Symptom
灯常亮	Lamp always on

故障码 P-Code	P0670
硬件结构	Hardware structure

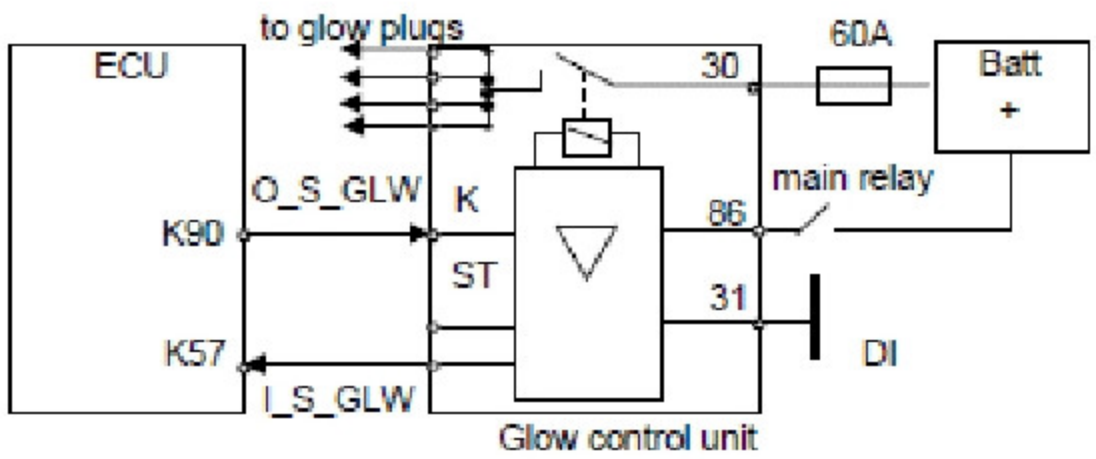

故障类型描述	Fault Path Type Description
预热塞标准电压系统开路	No load error for Standard Voltage System
故障发生的可能原因	Possible Cause
ECU 驱动 Glow 的控制输出端开路 (67 号线开路)	Control output end of ECU for driving Glow open circuit (67 open circuit)
检查项目	Check Items
检查 Glow 控制电路 , 是否控制端开路	Check Glow control circuit to see if the control end open circuit
可能的影响	Possible Symptom
Glow 不工作	Glow not working

故障码 P-Code	P160C
硬件结构	Hardware structure

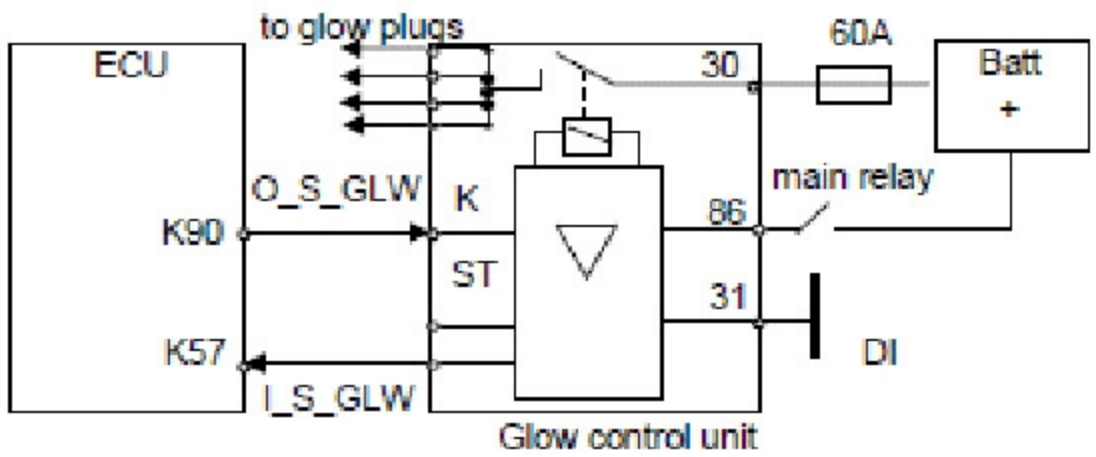

故障类型描述	Fault Path Type Description
预热塞标准电压系统 ECU 驱动级温度过高	Over temperature error on ECU powerstage for Glow plug Standard Voltage System
故障发生的可能原因	Possible Cause
ECU 驱动 Glow 的控制模块过热	Control module of ECU for driving Glow over temperature
检查项目	Check Items
检查 Glow 控制模块是否过热 , 或更换 ECU	Check if the Glow control module over temperature or replace ECU
可能的影响	Possible Symptom
Glow 不工作	Glow not working

故障码 P-Code	P0384
硬件结构	Hardware structure

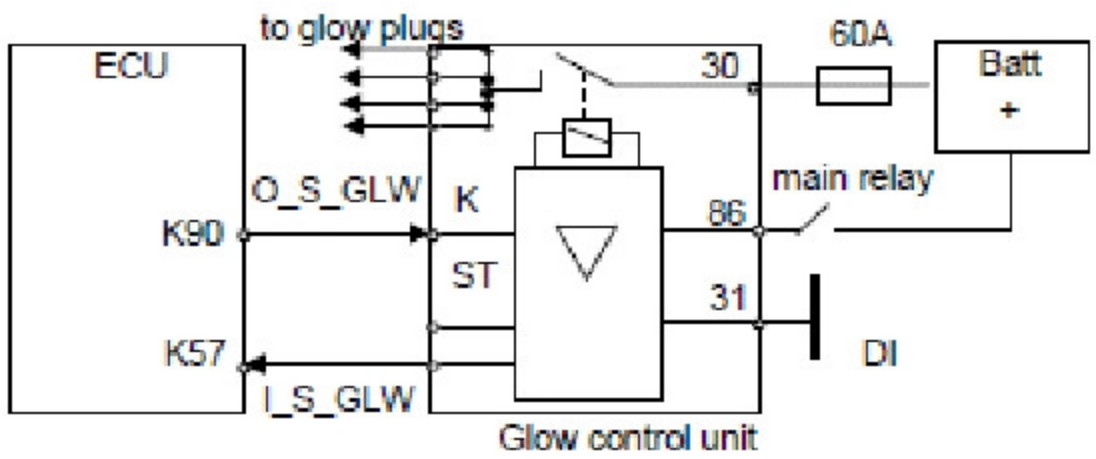

故障类型描述	Fault Path Type Description
预热塞驱动电路对电源短路	Short circuit to battery error for Standard Voltage System
故障发生的可能原因	Possible Cause
ECU 驱动 Glow 的控制输出端与电源，高电平短路	Control output end of ECU for driving Glow short circuit to battery, high level
检查项目	Check Items
检查 Glow 控制电路，是否控制端与电源，高电平短路	Check the Glow control circuit to see if the control end short circuit to battery, high level
可能的影响	Possible Symptom
Glow 不工作	Glow not working

故障码 P-Code	P0383
硬件结构	Hardware structure

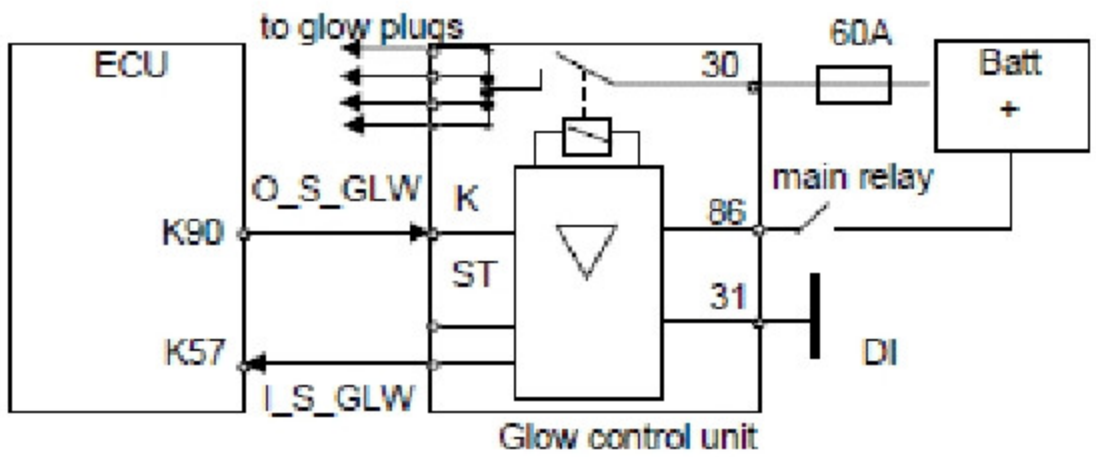

故障类型描述	Fault Path Type Description
预热塞驱动电路对地短路	Short circuit to ground error for Standard Voltage System
故障发生的可能原因	Possible Cause
ECU 驱动 Glow 的控制输出端对地，低电平短路	Control output end of ECU for driving Glow short circuit to ground, low level
检查项目	Check Items
检查Glow控制电路，是否控制端与地，低电平短路	Check the Glow control circuit to see if the control end short circuit to ground, low level
可能的影响	Possible Symptom
Glow 始终处于工作状态	Glow always in work status

故障码 P-Code	P1645
故障类型描述	Fault Path Type Description
喷油次数被 ECU 充电模块能力限制	Number of injections is limited by charge balance of booster capacity
故障发生的可能原因	Possible Cause
喷油器 ,ECU 芯片等工作不正常	Injector and ECU chip etc. in abnormal operation
检查项目	Check Items
检查喷油器 ,ECU 工作情况	Check the working conditions of injector and ECU
可能的影响	Possible Symptom
系统无明显反应	No obvious response from the system

故障码 P-Code	P1646
故障类型描述	Fault Path Type Description
喷油次数被高压油泵油量平衡限制	Number of injections is limited by quantity balance of high pressure pump
故障发生的可能原因	Possible Cause
喷油器 ,ECU 芯片等工作不正常	Injector and ECU chip etc. in abnormal operation
检查项目	Check Items
检查喷油器 ,ECU 工作情况	Check the working conditions of injector and ECU
可能的影响	Possible Symptom
系统无明显反应	No obvious response from the system

故障码 P-Code	P0611
故障类型描述	Fault Path Type Description
喷油次数被系统限制	Number of injections is limited by system
故障发生的可能原因	Possible Cause
喷油器 ,ECU 芯片等工作不正常	Injector and ECU chip etc. in abnormal operation
检查项目	Check Items
检查喷油器 ,ECU 工作情况	Check the working conditions of injector and ECU
可能的影响	Possible Symptom
系统无明显反应	No obvious response from the system

故障码 P-Code	P1647
故障类型描述	Fault Path Type Description
喷油次数被运行时间限制	Number of injections is limited by runtime
故障发生的可能原因	Possible Cause
喷油器 ,ECU 芯片等工作不正常	Injector and ECU chip etc. in abnormal operation
检查项目	Check Items
检查喷油器 ,ECU 工作情况	Check the working conditions of injector and ECU
可能的影响	Possible Symptom
系统无明显反应	No obvious response from the system

故障码 P-Code	P2290
故障类型描述	Fault Path Type Description
最小轨压检查错误	Check of minimum rail pressure
故障发生的可能原因	Possible Cause
喷油器 ,ECU 芯片等工作不正常	Injector and ECU chip etc. in abnormal operation
检查项目	Check Items
检查喷油器 ,ECU 工作情况	Check the working conditions of injector and ECU
可能的影响	Possible Symptom
系统无明显反应	No obvious response from the system

故障码 P-Code	P0263
硬件结构	Hardware structure

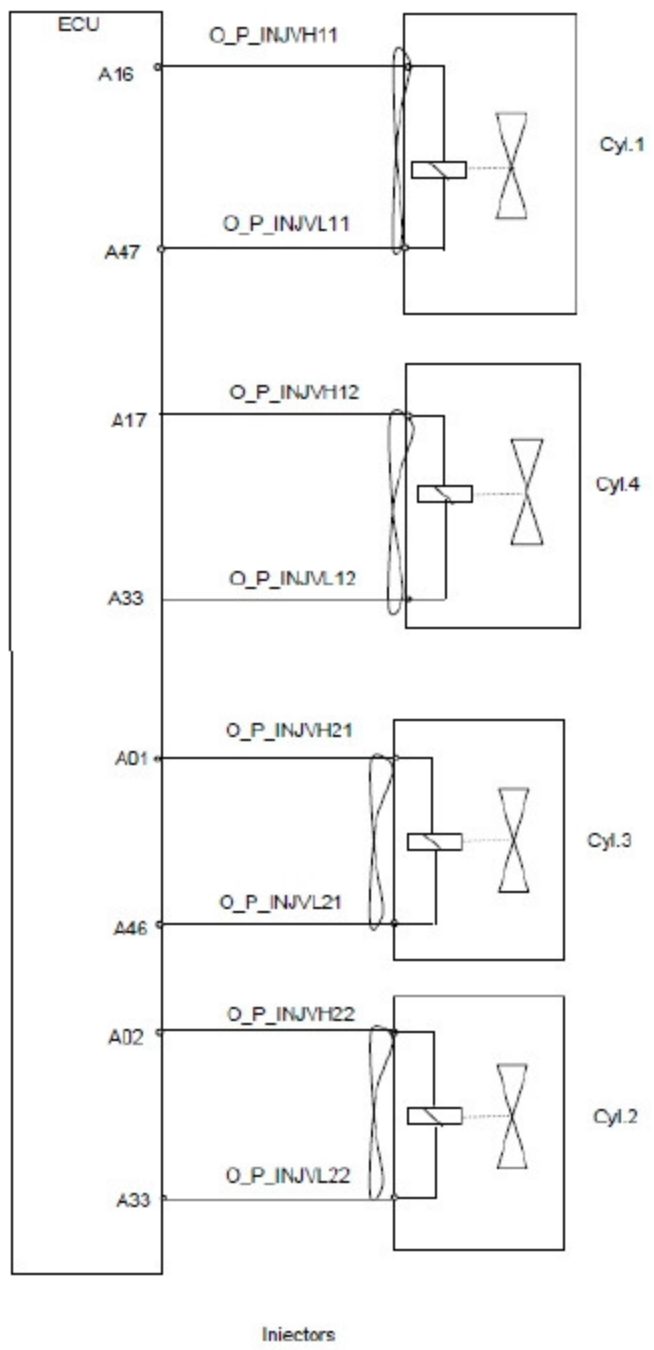

故障类型描述	Fault Path Type Description
发火顺序 1 缸无油量修正	Check of missing injector adjustment value programming of Cylinder 1
故障发生的可能原因	Possible Cause
未刷喷油器修正码 （IQA 码）或刷错等	No injector correction code written (IQA code) or written with wrong code etc
检查项目	Check Items
检测 IQA 码	Check the IQA code
可能的影响	Possible Symptom
喷油器修正不正确可能会有冒烟等不正常的燃烧现象发生	Poor combustion with smoke etc. due to incorrect rectification of injector

故障码 P-Code	P0266
硬件结构	Hardware structure

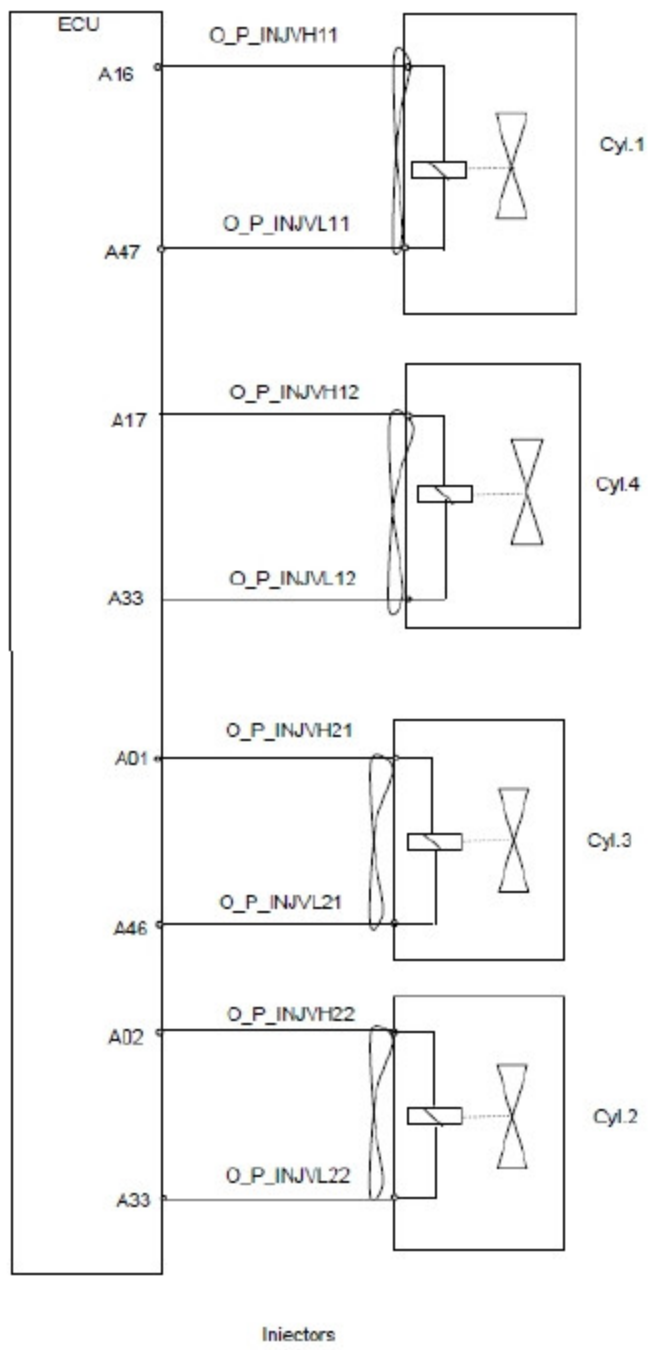

故障类型描述	Fault Path Type Description
发火顺序 2 缸无油量修正	Check of missing injector adjustment value programming of Cylinder 2
故障发生的可能原因	Possible Cause
未刷喷油器修正码（IQA 码）或刷错等	No injector correction code written (IQA code) or written with wrong code etc
检查项目	Check Items
检测 IQA 码	Check the IQA code
可能的影响	Possible Symptom
喷油器修正不正确可能会有冒烟等不正常的燃烧现象发生	Poor combustion with smoke etc. due to incorrect rectification of injector

故障码 P-Code	P0269
硬件结构	Hardware structure

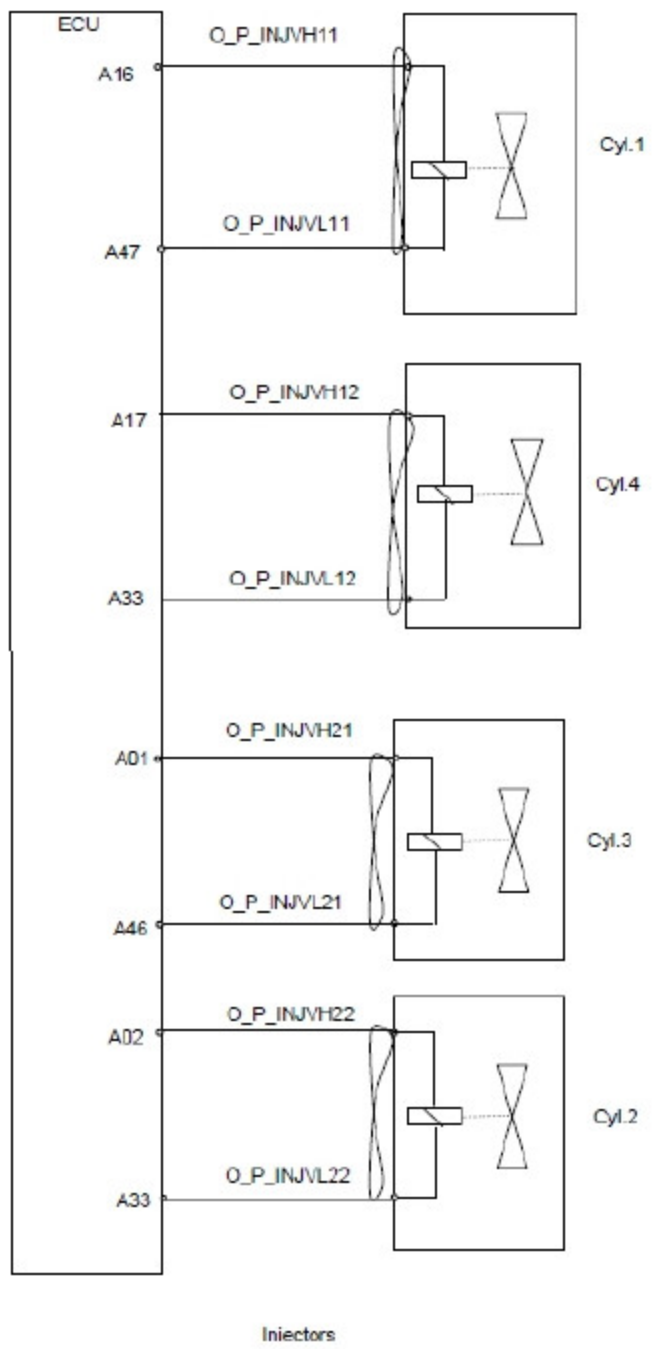

故障类型描述	Fault Path Type Description
发火顺序 3 缸无油量修正	Check of missing injector adjustment value programming of Cylinder 3
故障发生的可能原因	Possible Cause
未刷喷油器修正码 （IQA 码）或刷错等	No injector correction code written (IQA code) or written with wrong code etc
检查项目	Check Items
检测 IQA 码	Check the IQA code
可能的影响	Possible Symptom
喷油器修正不正确可能会有冒烟等不正常的燃烧现象发生	Poor combustion with smoke etc. due to incorrect rectification of injector

故障码 P-Code	P0272
硬件结构	Hardware structure

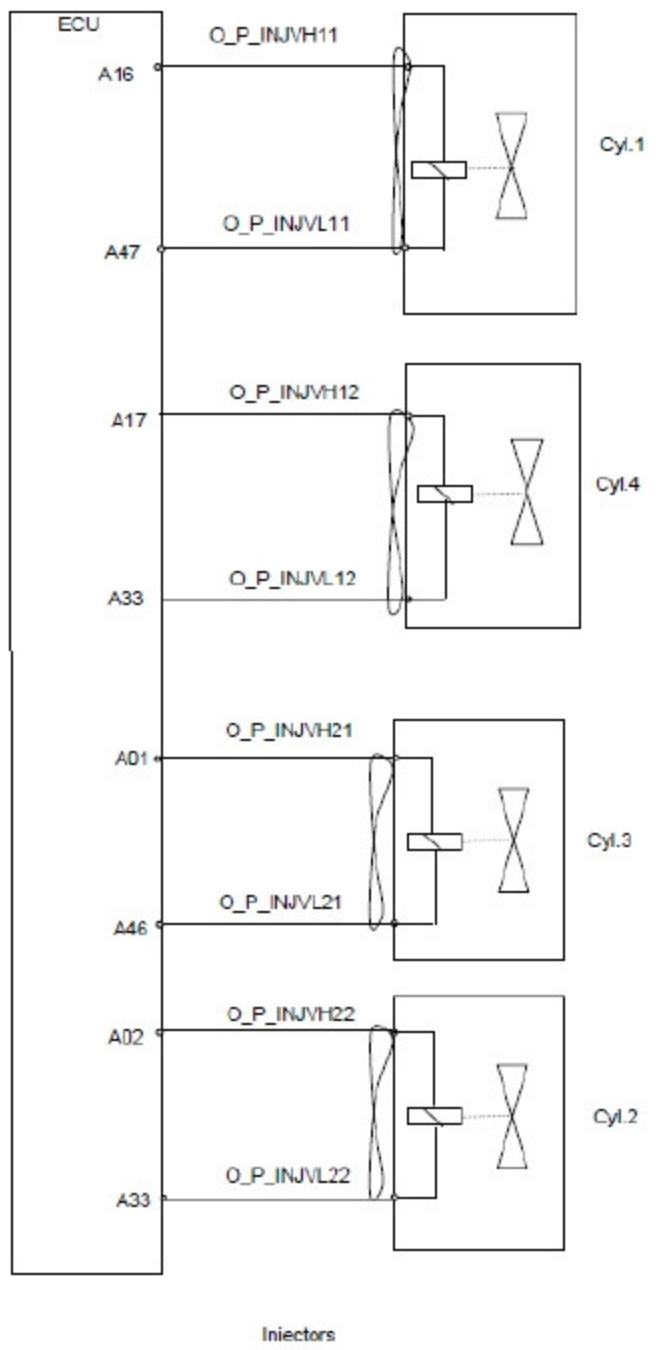

故障类型描述	Fault Path Type Description
发火顺序 4 缸无油量修正	Check of missing injector adjustment value programming of Cylinder 4
故障发生的可能原因	Possible Cause
未刷喷油器修正码（IQA 码）或刷错等	No injector correction code written (IQA code) or written with wrong code etc
检查项目	Check Items
检测 IQA 码	Check the IQA code
可能的影响	Possible Symptom
喷油器修正不正确可能会有冒烟等不正常的燃烧现象发生	Poor combustion with smoke etc. due to incorrect rectification of injector

故障码 P-Code	P2146
硬件结构	Hardware structure

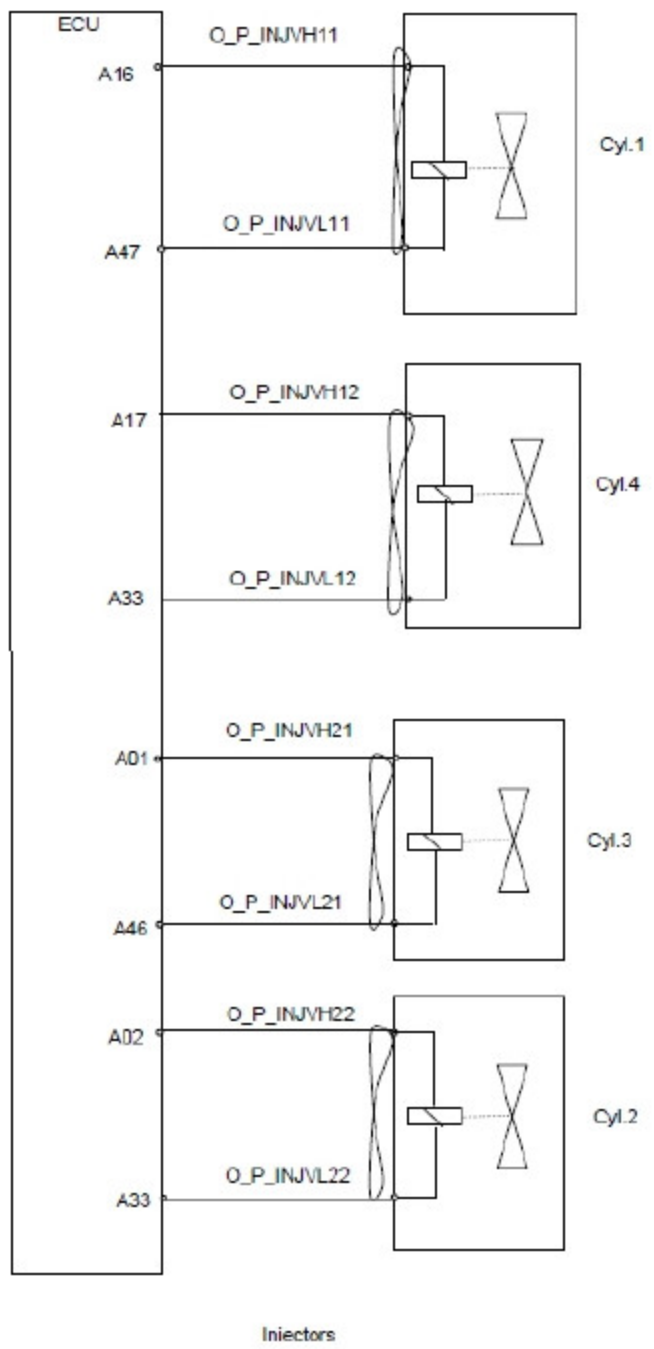

故障类型描述	Fault Path Type Description
喷油器控制模块 1 （线束）短路故障	Short circuit of Injector control moudle 1
故障发生的可能原因	Possible Cause
喷油器供电模块短路	Injector supply module short circuit
检查项目	Check Items
检测喷油器电路	Check the Injector circuit
可能的影响	Possible Symptom
停机	Stop

故障码 P-Code	P2149
硬件结构	Hardware structure

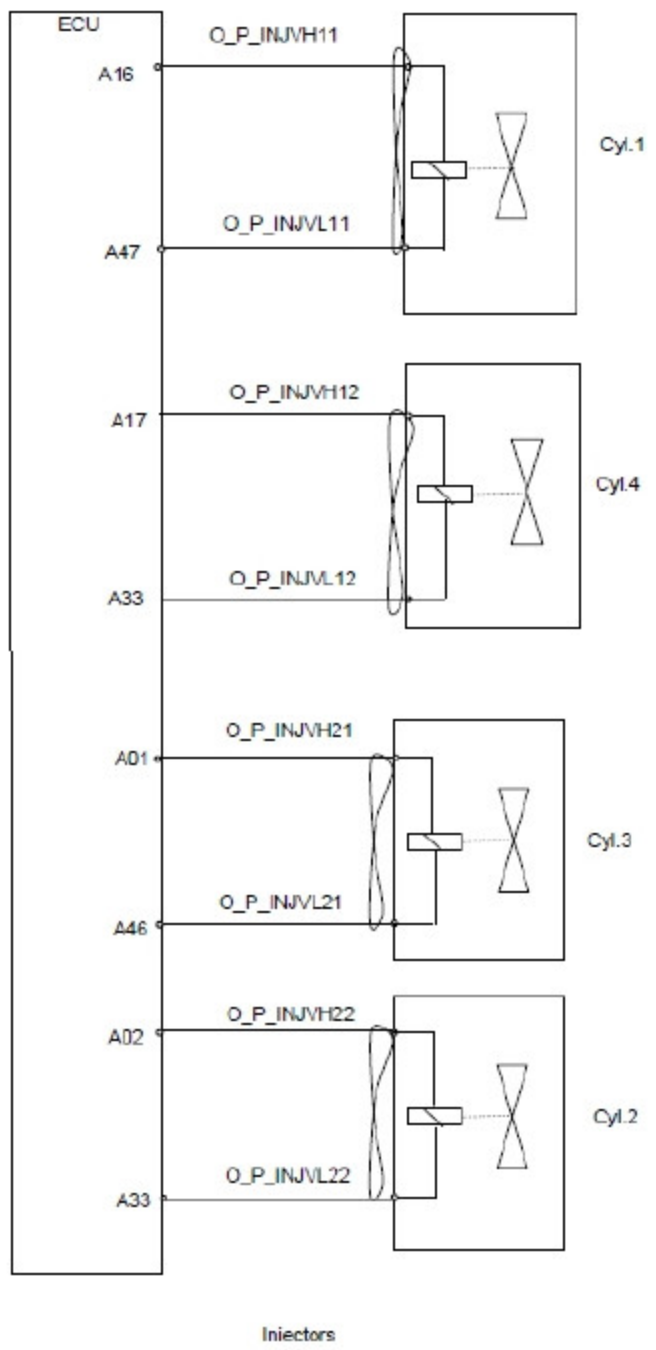

故障类型描述	Fault Path Type Description
喷油器控制模块 2 （线束）短路故障	Short circuit of Injector control moudle 2
故障发生的可能原因	Possible Cause
喷油器供电模块短路	Injector supply module short circuit
检查项目	Check Items
检测喷油器电路	Check the Injector circuit
可能的影响	Possible Symptom
停机	Stop

故障码 P-Code	P167B
硬件结构	Hardware structure

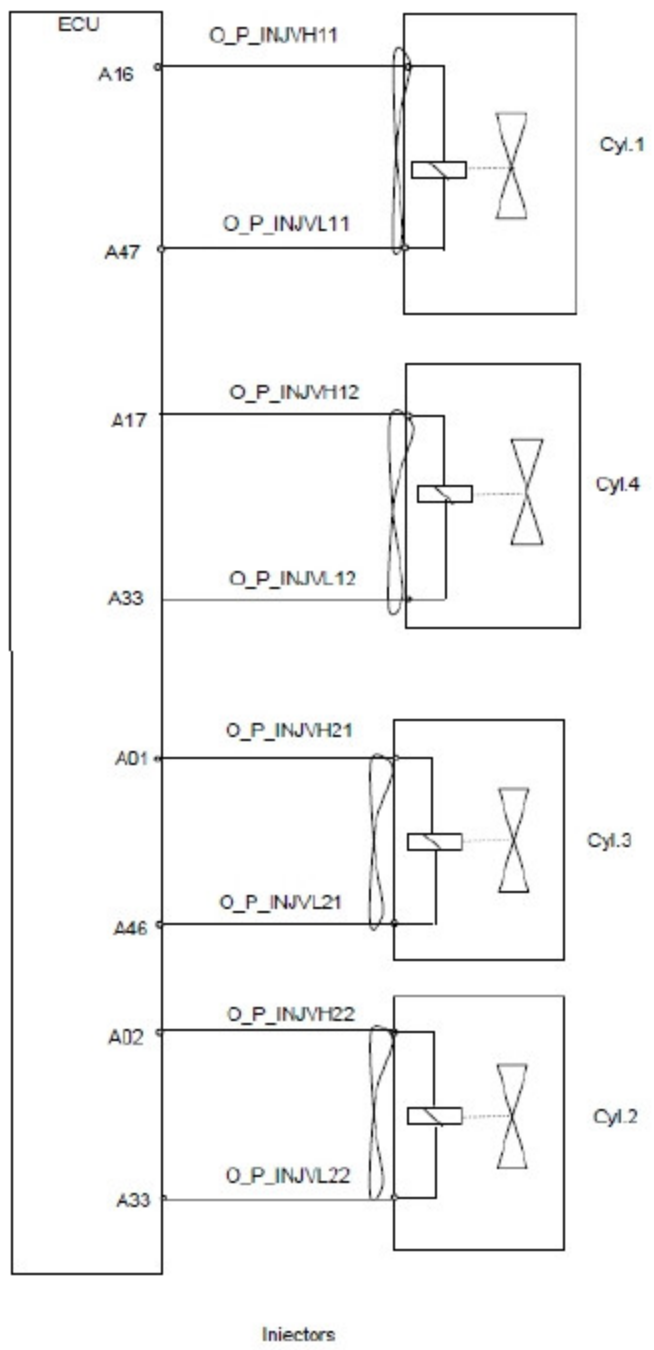

故障类型描述	Fault Path Type Description
CY33X 被检测到故障	CY33X is defect
故障发生的可能原因	Possible Cause
喷油器芯片故障	Injector chip error
检查项目	Check Items
检测喷油器芯片	Check injector chip
可能的影响	Possible Symptom
停机	Stop

故障码 P-Code	P0201
硬件结构	Hardware structure

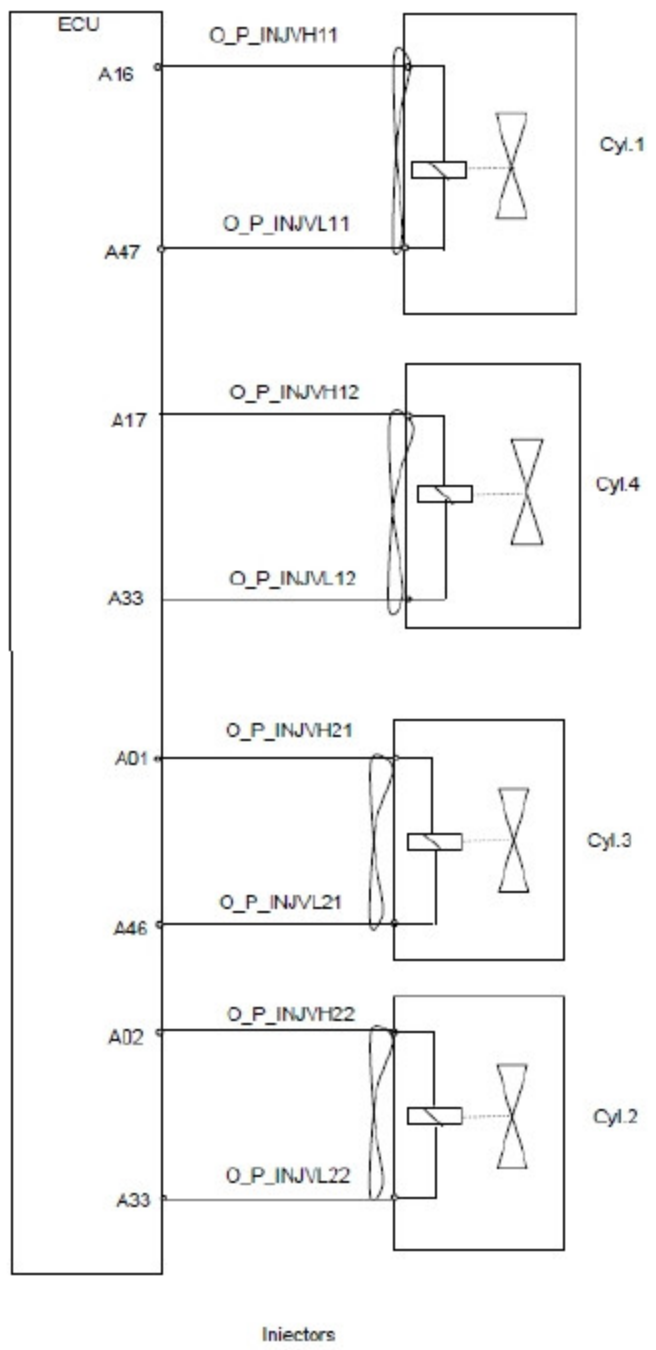

故障类型描述	Fault Path Type Description
发火顺序 1 缸喷油器开路	Open load of Cylinder 1 Injector
故障发生的可能原因	Possible Cause
发火顺序 1 缸开路	Cylinder 1 (in firing order) open circuit
检查项目	Check Items
检测相关缸的喷油器电路	Check the injector circuit of related cylinder
可能的影响	Possible Symptom
发动机在缺缸情况下工作，抖动，如果该动力不足以维持发动机克报摩擦，则会停机	The engine vibrates when the cylinder not in operation, and stops if the power is not enough to support the engine to overcome the friction

故障码 P-Code	P0202
硬件结构	Hardware structure

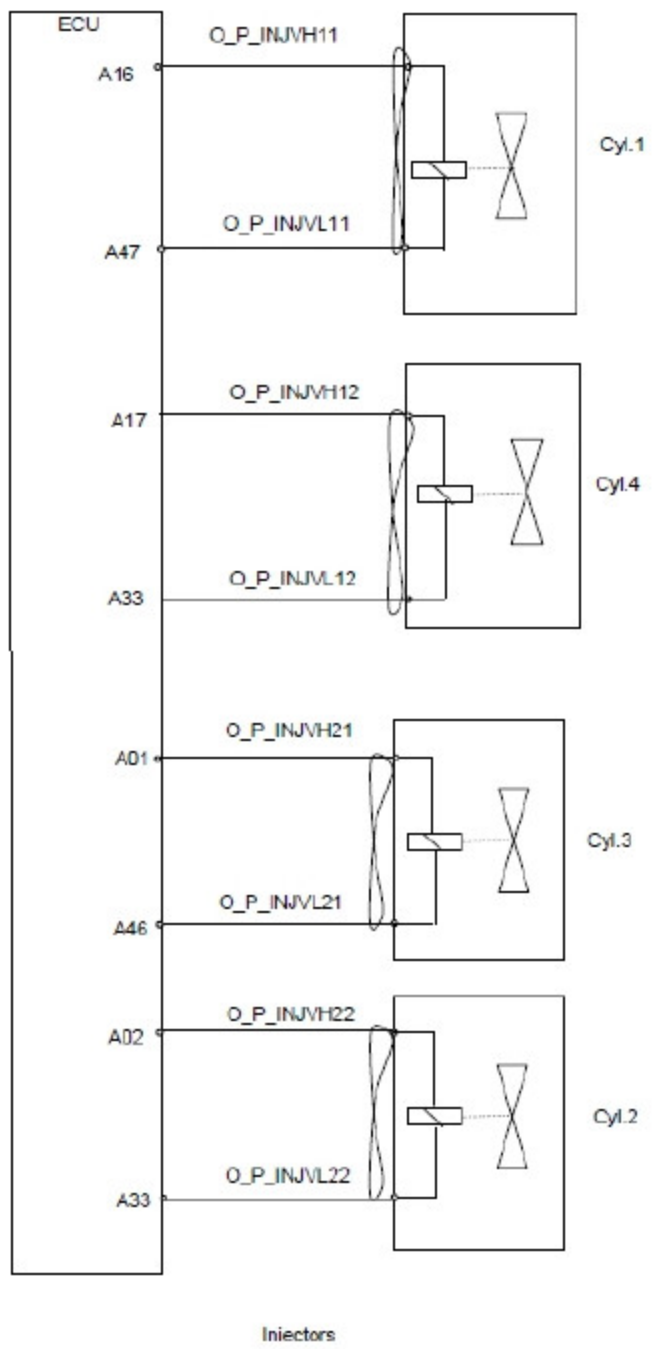

故障类型描述	Fault Path Type Description
发火顺序 2 缸喷油器开路	Open load of Cylinder 2 Injector
故障发生的可能原因	Possible Cause
发火顺序 2 缸开路	Cylinder 2 (in firing order) open circuit
检查项目	Check Items
检测相关缸的喷油器电路	Check the injector circuit of related cylinder
可能的影响	Possible Symptom
发动机在缺缸情况下工作，抖动，如果该动力不足以维持发动机克报摩擦，则会停机	The engine vibrates when the cylinder not in operation, and stops if the power is not enough to support the engine to overcome the friction

故障码 P-Code	P0203
硬件结构	Hardware structure

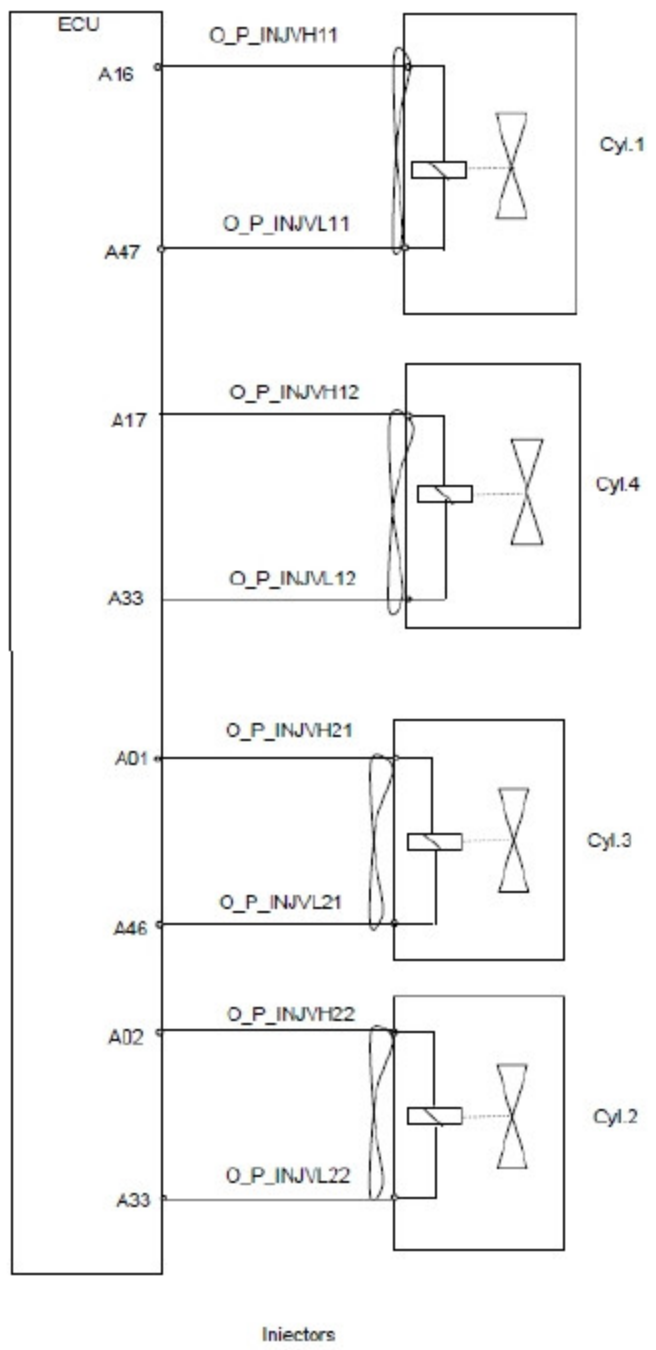

故障类型描述	Fault Path Type Description
发火顺序 3 缸开路	Cylinder 3 (in firing order) open circuit
故障发生的可能原因	Possible Cause
发火顺序 3 缸开路	Cylinder 2 (in firing order) open circuit
检查项目	Check Items
检测相关缸的喷油器电路	Check the injector circuit of related cylinder
可能的影响	Possible Symptom
发动机在缺缸情况下工作，抖动，如果该动力不足以维持发动机克报摩擦，则会停机	The engine vibrates when the cylinder not in operation, and stops if the power is not enough to support the engine to overcome the friction

故障码 P-Code	P0204
硬件结构	Hardware structure

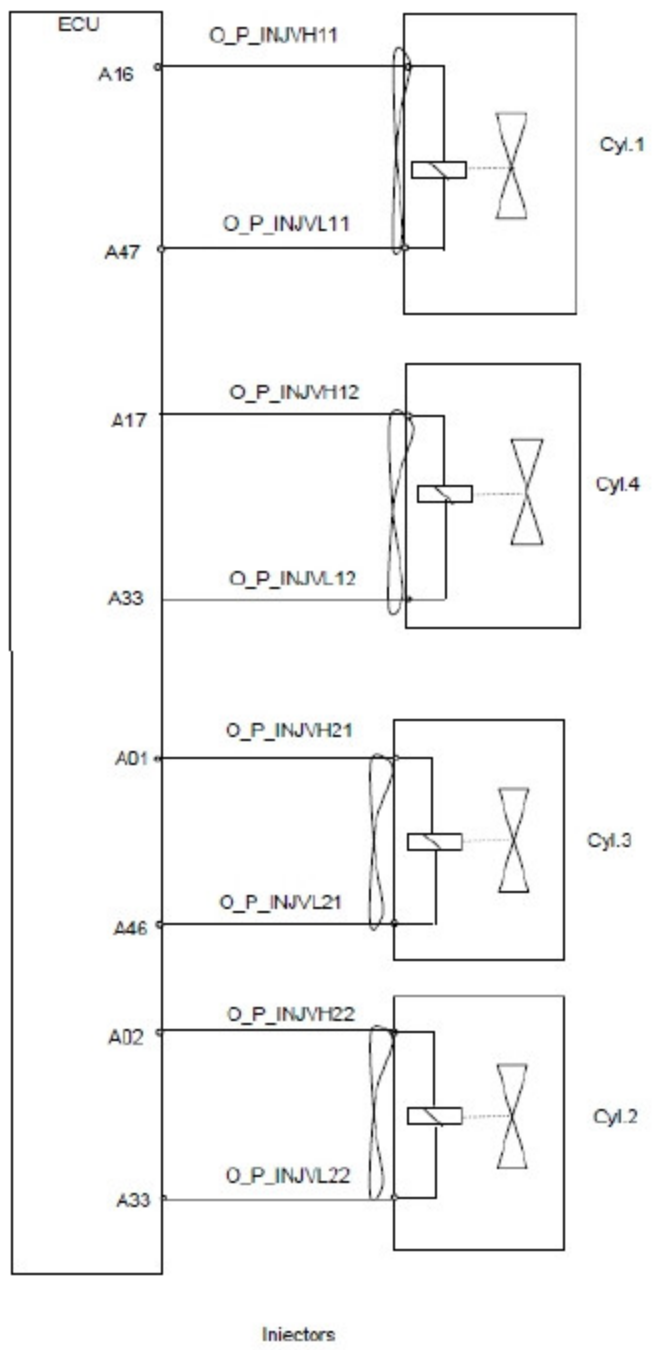

故障类型描述	Fault Path Type Description
发火顺序 4 缸喷油器开路	Open load of Cylinder 4 Injector
故障发生的可能原因	Possible Cause
发火顺序 4 缸开路	Cylinder 4 (in firing order) open circuit
检查项目	Check Items
检测相关缸的喷油器电路	Check the injector circuit of related cylinder
可能的影响	Possible Symptom
发动机在缺缸情况下工作，抖动，如果该动力不足以维持发动机克报摩擦，则会停机	The engine vibrates when the cylinder not in operation, and stops if the power is not enough to support the engine to overcome the friction

故障码 P-Code	P1207
硬件结构	Hardware structure

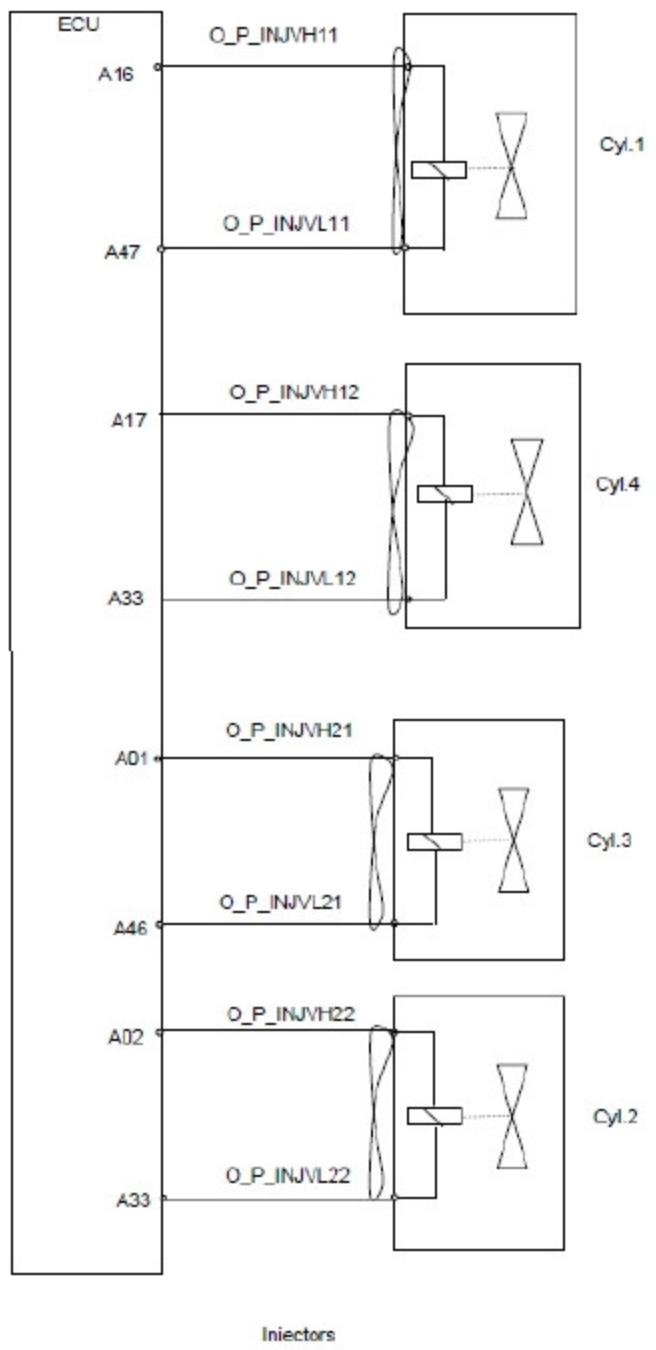

故障类型描述	Fault Path Type Description
发火顺序 1 缸特殊故障 （自定义）	Special pattern for special cases of Cylinder 1
故障发生的可能原因	Possible Cause
自定义故障	User-defined fault
检查项目	Check Items
检查喷油器	Check injector
可能的影响	Possible Symptom
系统无明显反应	No obvious response from the system

故障码 P-Code	P1208
硬件结构	Hardware structure

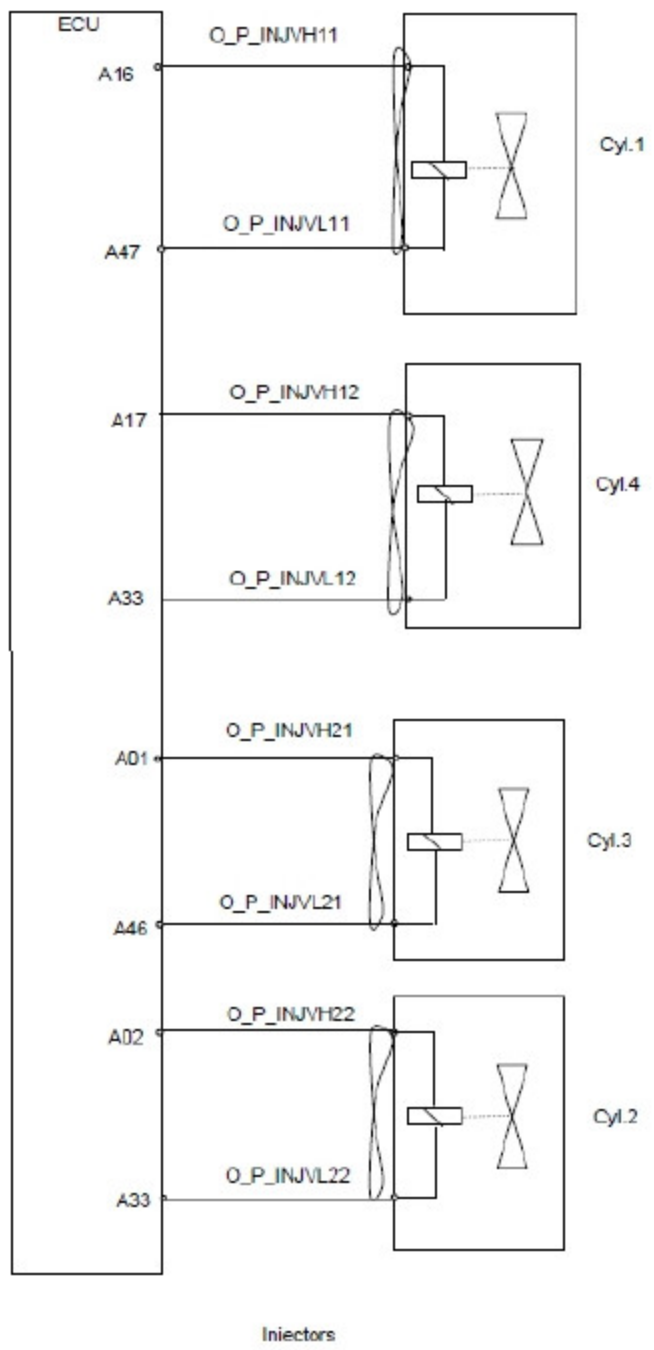

故障类型描述	Fault Path Type Description
发火顺序 2 缸特殊故障 （自定义）	Special pattern for special cases of Cylinder 2
故障发生的可能原因	Possible Cause
自定义故障	User-defined fault
检查项目	Check Items
检查喷油器	Check injector
可能的影响	Possible Symptom
系统无明显反应	No obvious response from the system

故障码 P-Code	P1209
硬件结构	Hardware structure

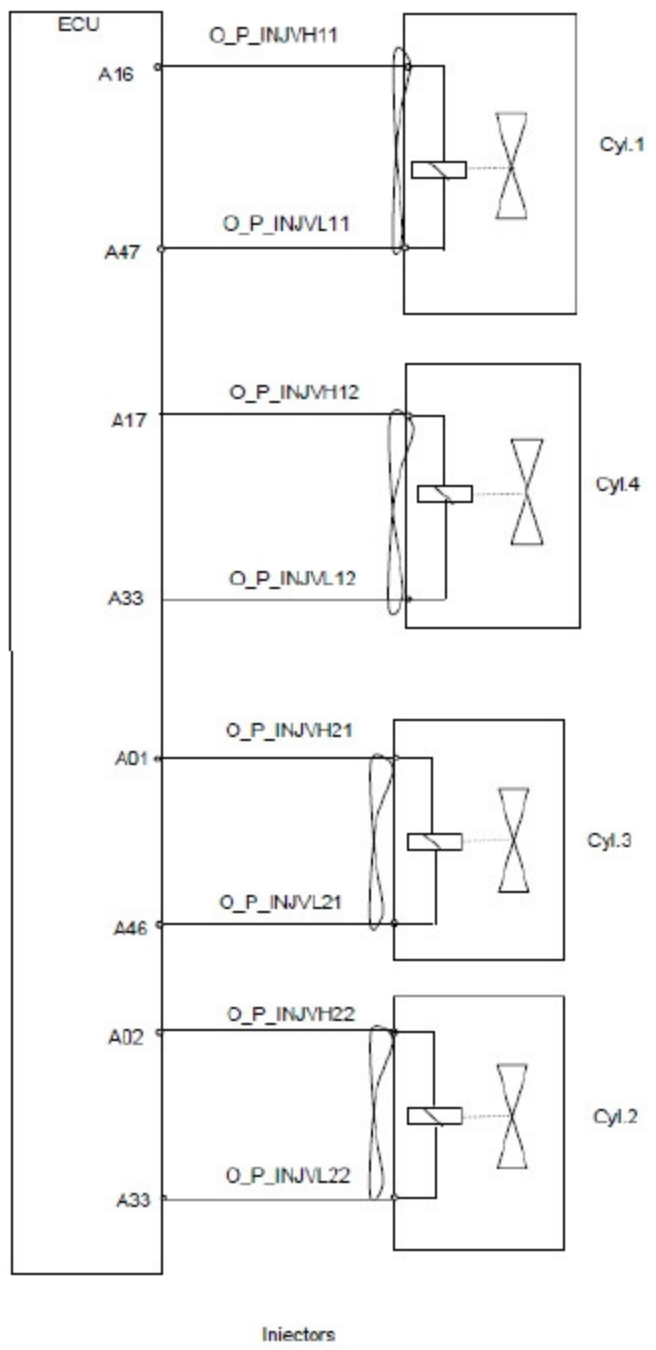

故障类型描述	Fault Path Type Description
发火顺序 3 缸特殊故障 （自定义）	Special pattern for special cases of Cylinder 3
故障发生的可能原因	Possible Cause
自定义故障	User-defined fault
检查项目	Check Items
检查喷油器	Check injector
可能的影响	Possible Symptom
系统无明显反应	No obvious response from the system

故障码 P-Code	P120A
硬件结构	Hardware structure

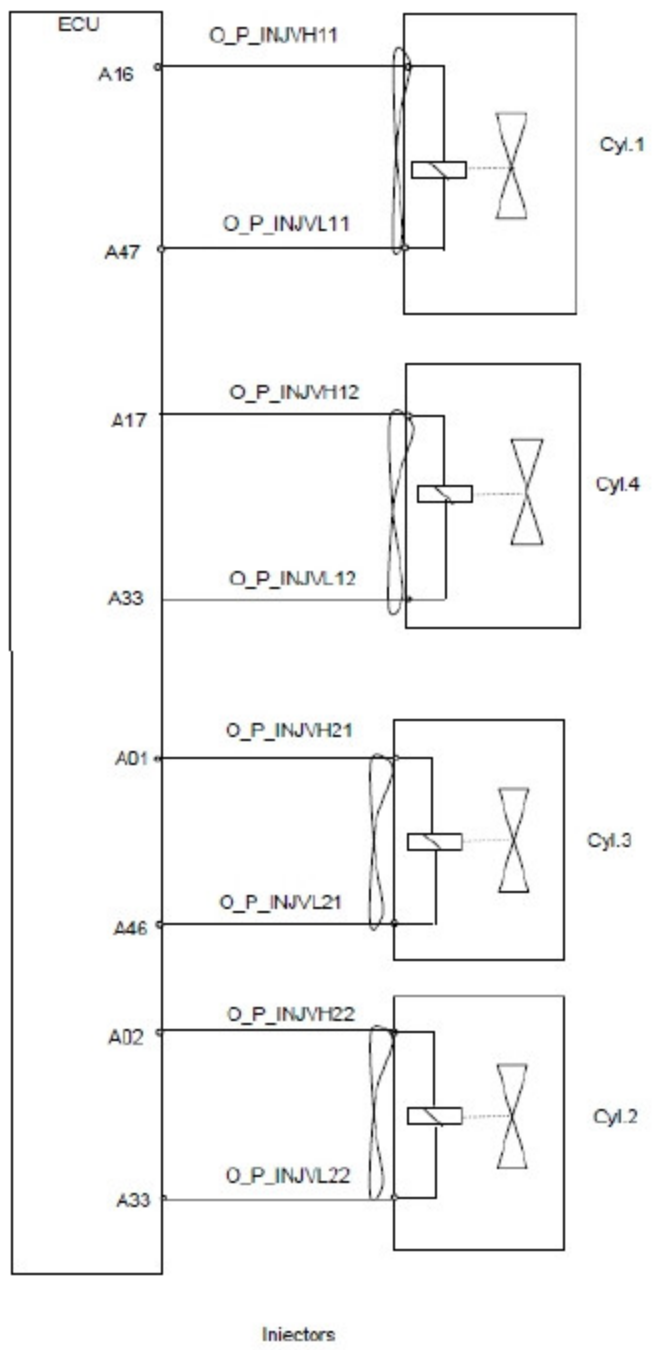

故障类型描述	Fault Path Type Description
发火顺序 4 缸特殊故障 （自定义）	Special pattern for special cases of Cylinder 4
故障发生的可能原因	Possible Cause
自定义故障	User-defined fault
检查项目	Check Items
检查喷油器	Check injector
可能的影响	Possible Symptom
系统无明显反应	No obvious response from the system

故障码 P-Code	P121A
硬件结构	Hardware structure

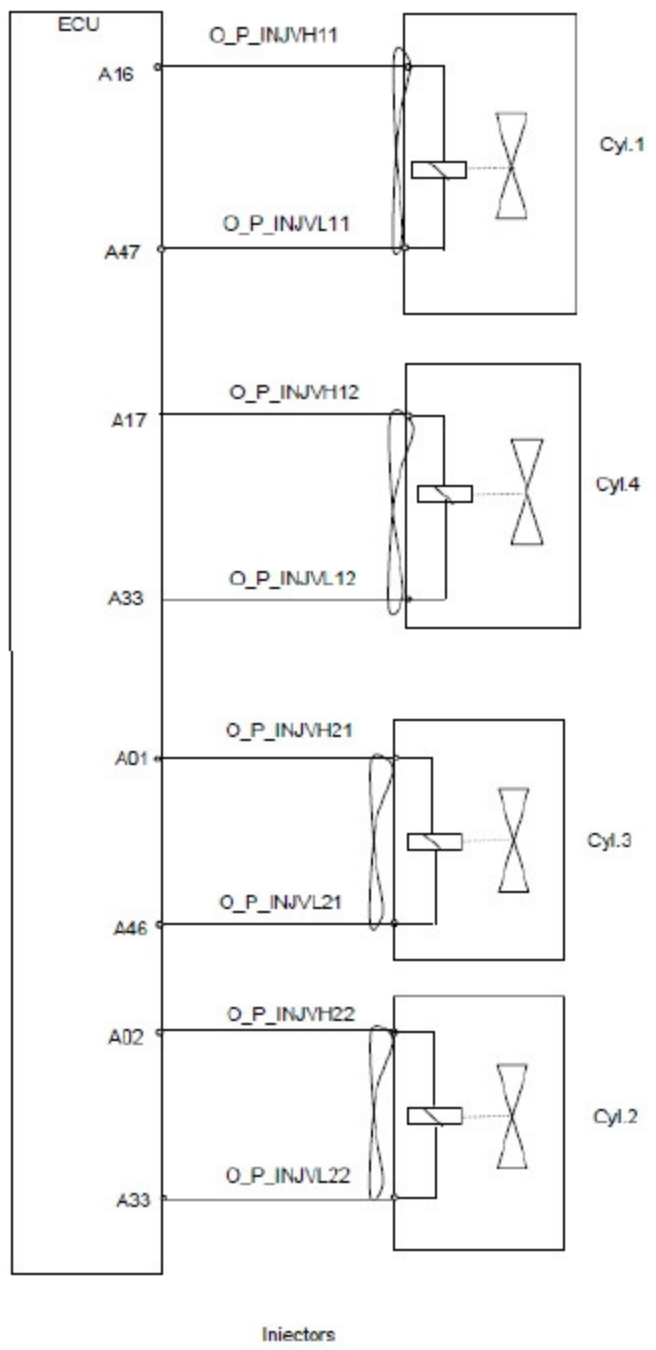

故障类型描述	Fault Path Type Description
发火顺序第 1 缸插头一般性短路	General short circuit of Cylinder 1 pin
故障发生的可能原因	Possible Cause
发火顺序 1 缸与电源短路	Cylinder 1 (in firing order) short circuit to battery
检查项目	Check Items
检测相关缸的喷油器电路	Check the injector circuit of related cylinder
可能的影响	Possible Symptom
停机	Stop

故障码 P-Code	P121B
硬件结构	Hardware structure

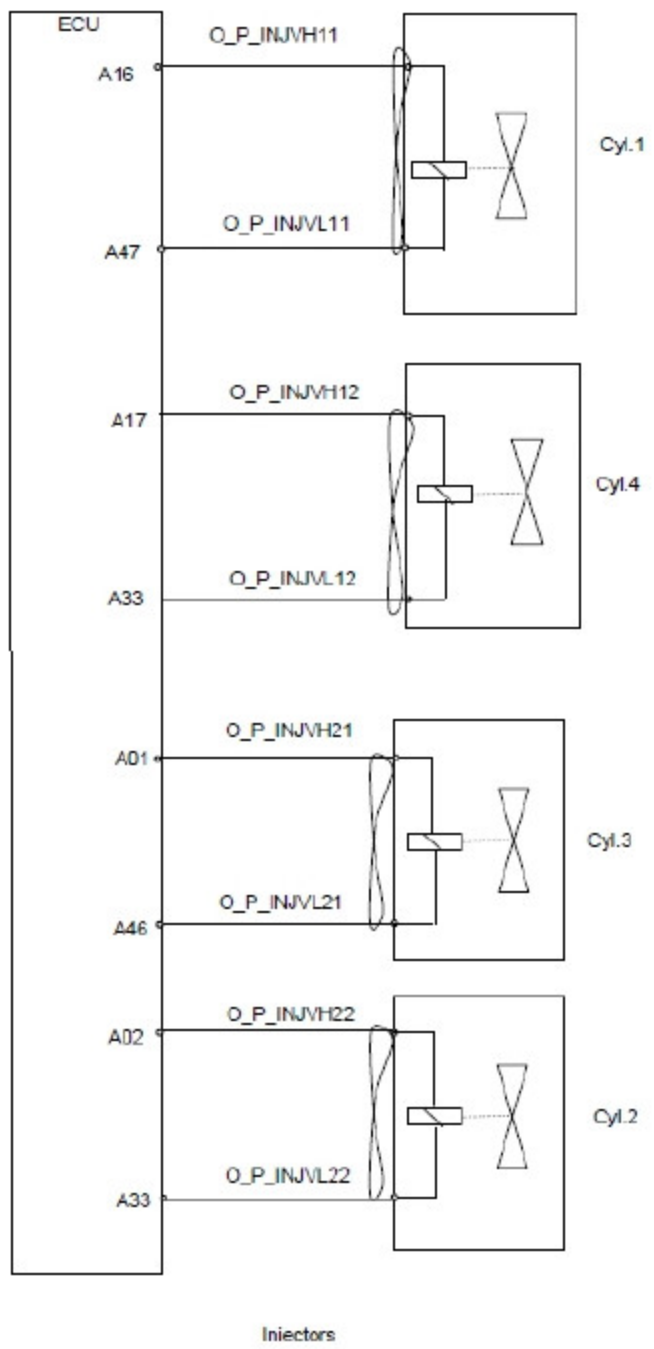

故障类型描述	Fault Path Type Description
发火顺序第 2 缸插头一般性短路	General short circuit of Cylinder 2 pin
故障发生的可能原因	Possible Cause
发火顺序 2 缸与电源短路	Cylinder 2 (in firing order) short circuit to battery
检查项目	Check Items
检测相关缸的喷油器电路	Check the injector circuit of related cylinder
可能的影响	Possible Symptom
停机	Stop

故障码 P-Code	P121C
硬件结构	Hardware structure

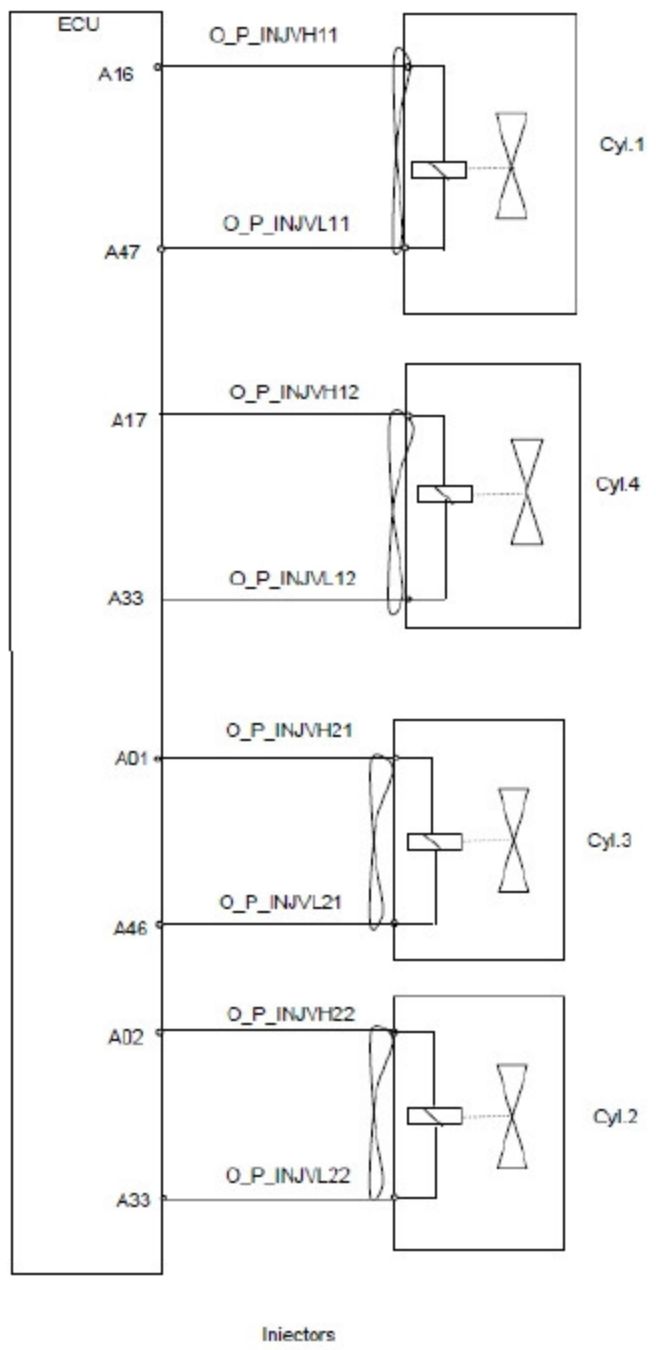

故障类型描述	Fault Path Type Description
发火顺序第 3 缸插头一般性短路	General short circuit of Cylinder 3 pin
故障发生的可能原因	Possible Cause
发火顺序 3 缸与电源短路	Cylinder 3 (in firing order) short circuit to battery
检查项目	Check Items
检测相关缸的喷油器电路	Check the injector circuit of related cylinder
可能的影响	Possible Symptom
停机	Stop

故障码 P-Code	P121D
硬件结构	Hardware structure

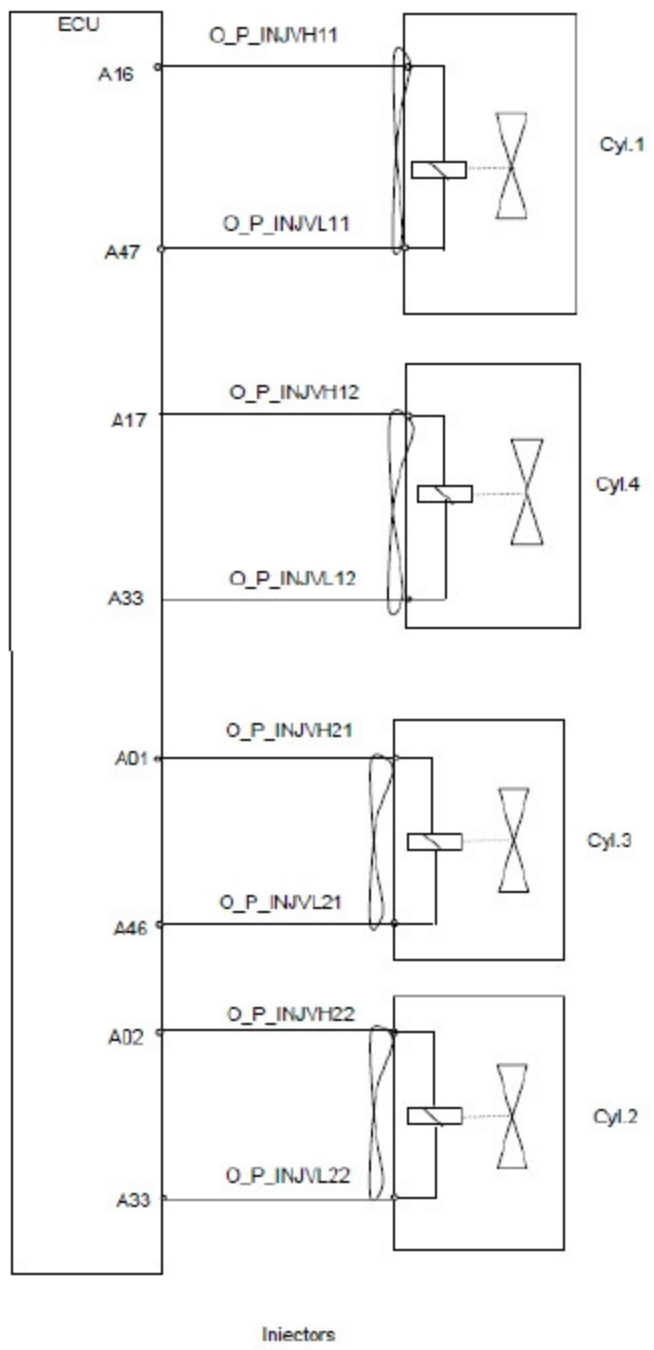

故障类型描述	Fault Path Type Description
发火顺序第 4 缸插头一般性短路	General short circuit of Cylinder 4 pin
故障发生的可能原因	Possible Cause
发火顺序 4 缸与电源短路	Cylinder 4 (in firing order) short circuit to battery
检查项目	Check Items
检测相关缸的喷油器电路	Check the injector circuit of related cylinder
可能的影响	Possible Symptom
停机	Stop

故障码 P-Code	P1200
硬件结构	Hardware structure

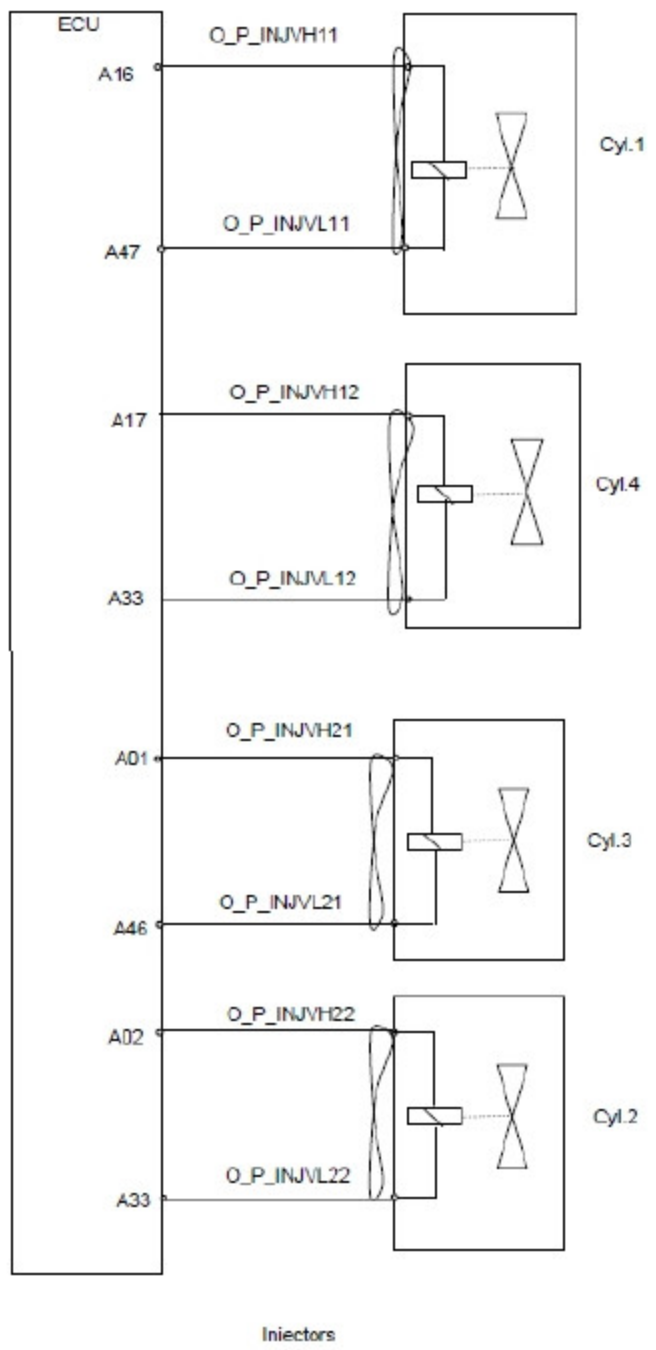

故障类型描述	Fault Path Type Description
发火顺序 1 缸高端与低端短路	Short circuit of high end and low end of cylinder 1 (in firing order)
故障发生的可能原因	Possible Cause
发火顺序 1 缸高端与低端短路	Short circuit of high end and low end of cylinder 1 (in firing order)
检查项目	Check Items
检测相关缸的喷油器电路	Check the injector circuit of related cylinder
可能的影响	Possible Symptom
停机	Stop

故障码 P-Code	P1201
硬件结构	Hardware structure

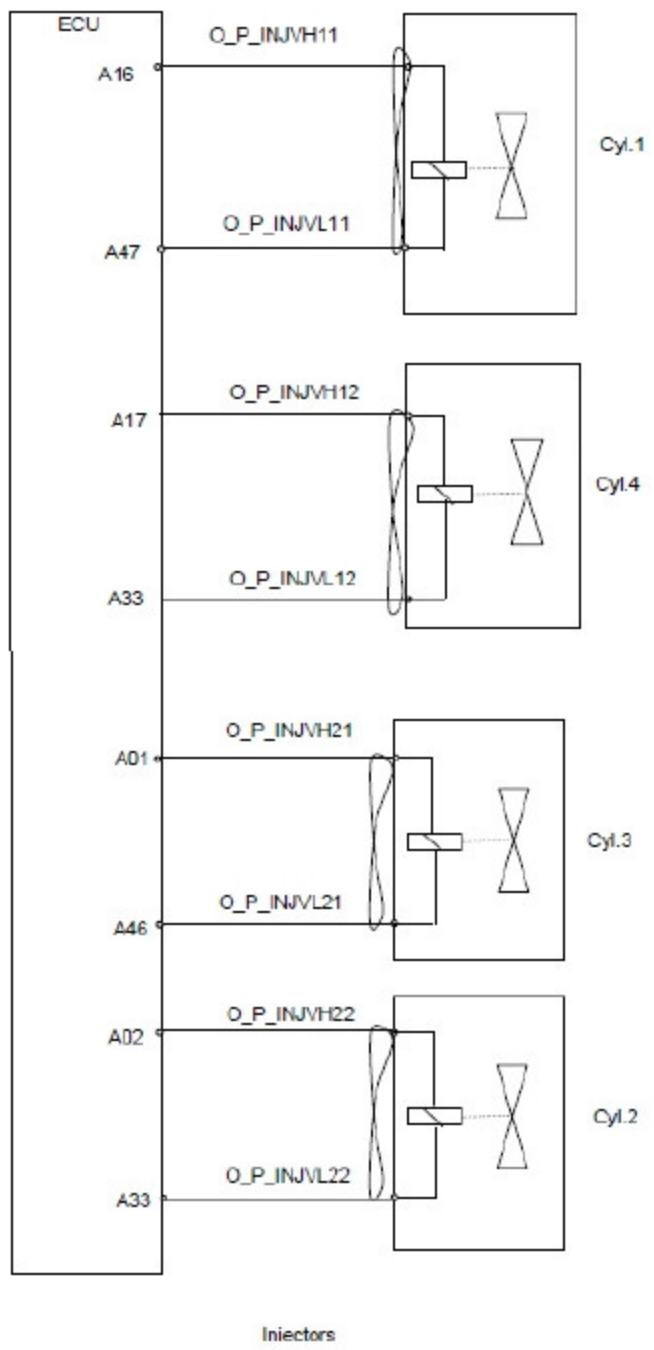

故障类型描述	Fault Path Type Description
发火顺序第 2 缸线束低端对高端短路	Short circuit Low Side to High Side of Cylinder 2 wiring
故障发生的可能原因	Possible Cause
发火顺序 2 缸高端与低端短路	Short circuit of high end and low end of cylinder 2 (in firing order)
检查项目	Check Items
检测相关缸的喷油器电路	Check the injector circuit of related cylinder
可能的影响	Possible Symptom
停机	Stop

故障码 P-Code	P1202
硬件结构	Hardware structure

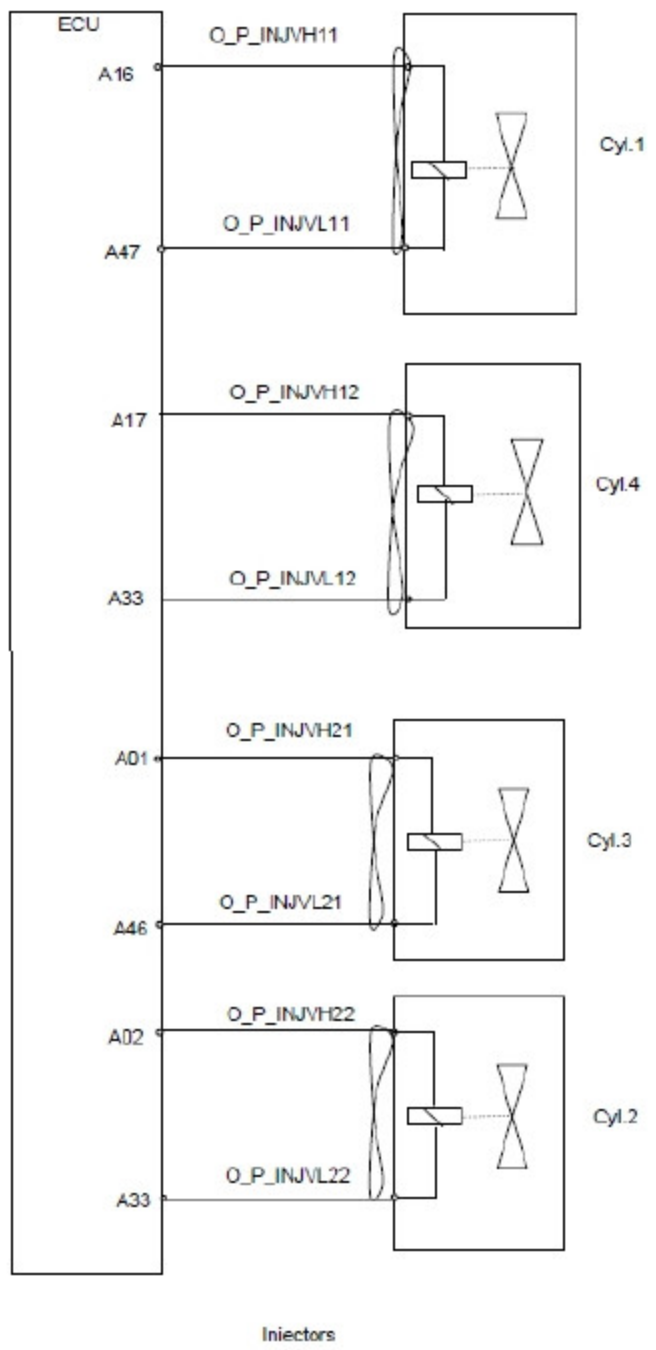

故障类型描述	Fault Path Type Description
发火顺序第 3 缸线束低端对高端短路	Short circuit Low Side to High Side of Cylinder 3 wiring
故障发生的可能原因	Possible Cause
发火顺序 3 缸高端与低端短路	Short circuit of high end and low end of cylinder 3 (in firing order)
检查项目	Check Items
检测相关缸的喷油器电路	Check the injector circuit of related cylinder
可能的影响	Possible Symptom
停机	Stop

故障码 P-Code	P1203
硬件结构	Hardware structure

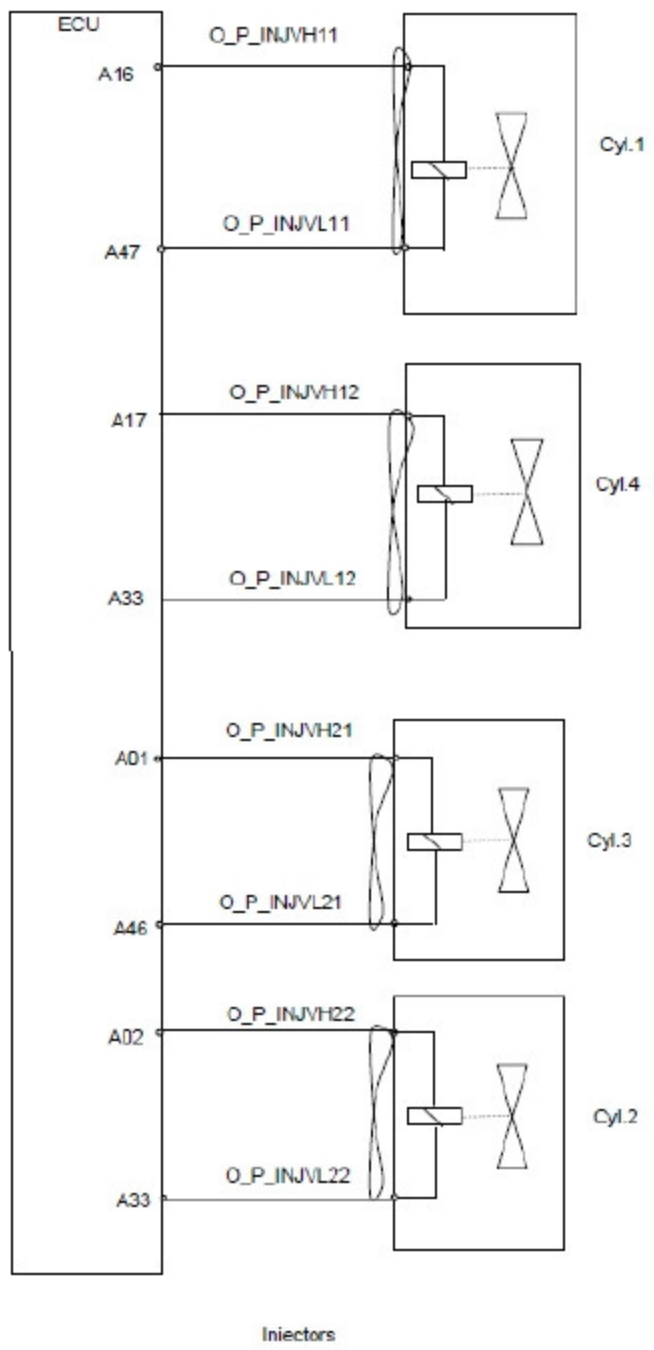

故障类型描述	Fault Path Type Description
发火顺序第 4 缸线束低端对高端短路	Short circuit Low Side to High Side of Cylinder 4 wiring
故障发生的可能原因	Possible Cause
发火顺序 4 缸高端与低端短路	Short circuit of high end and low end of cylinder 4 (in firing order)
检查项目	Check Items
检测相关缸的喷油器电路	Check the injector circuit of related cylinder
可能的影响	Possible Symptom
停机	Stop